Electrolux DISTRIPARTS

SERVICE MANUAL

DRYERS

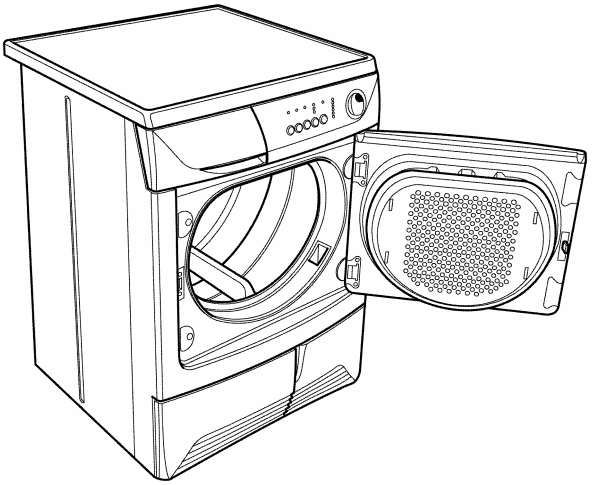

Condenser dryer with electronic control system

EDR1000NEW

(Nexus4)

Production:
ZP - Porcia (IT)

Spares Operations Italy
Corso Lino Zanussi, 30
I - 33080 PORCIA /PN (ITALY)

Fax +39 0434 394096

Publication no.

599 36 20-08

EN

Edition: 2003-12-04

TABLE OF CONTENTS

1 Purpose of this Manual

The purpose of this Service Manual is to provide service engineers who already have the basic knowledge necessary to repair dryers with information concerning condenser dryers with electronic control systems (mod. EDR1000NEW) produced in the factory in Porcia (Italy).

The EDR1000NEW control system features a single PCB that incorporates the power and display functions and a maximum of 13 LEDs and 5 switches. This PCB can be used with conductimetric condenser models as well as vented dryers.

This Service Manual describes the following aspects:

- General characteristics
- Control panel and drying programmes
- Technical characteristics
- Accessibility
- Diagnostics guide

2 IMPORTANT

2.1 Safety

⇨ **Repairs to electrical appliances must be effected only by qualified service engineers.**

⇨ **Before touching internal components, always remove the plug from the power socket.**

2.2 Installation

⇨ The appliance must be installed on a perfectly level surface in order to ensure that the condensed water flows correctly into the tank.

⇨ The feet must NOT be removed. The gap between the bottom of the dryer and the floor is essential to prevent overheating.

3 GENERAL CHARACTERISTICS

The EDR1000NEW control system consists of a single PCB which incorporates three functions: power, control and display. This PCB is fitted to conductimetric condenser dryers (i.e. those in which the steam is condensed inside the appliance).

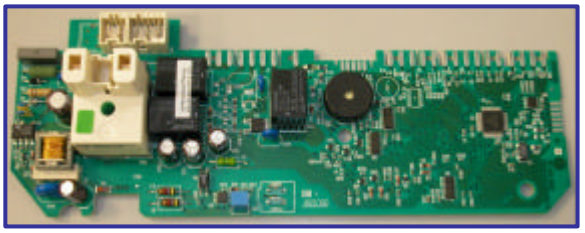

The PCB is inserted into a plastic casing, which is attached to the rear side of the control panel support. The PCB is available in two basic versions: one with four pushbuttons, the other with five.

Dimensions of appliance	▪ Height: ▪ Width: ▪ Depth:	85 cm 60 cm 58 cm
Power supply	▪ Volt: ▪ Hz:	220-240 50
No. pushbuttons	▪ "5-pushbutton" version : ▪ "4-pushbutton" version" :	4 options + start/pause 3 options + start/pause
No. LEDs	▪ "5-pushbutton" version : ▪ "4-pushbutton" version" :	13 10
Buzzer	▪ buzzer incorporated in the PCB	
Serial port	▪ DAAS-EAP protocol up to 38400 baud	
Programme selector	▪ 16 positions with main switch (incorporated in the PCB)	
Drying system	▪ condensation of humidity by heat exchanger	
Humidity control	▪ conductimetric sensor	
Motor	▪ single-phase asynchronous motor with capacitor	
Power of heater unit	▪ 2400 W version: ▪ 2000 W version:	1400W + 1000W 1400W + 600W
Temperature control	▪ NTC sensor	
Capacity of canister	▪ 4 litres approx.	
Canister fill pump (models with canister in upper section)	▪ Synchronous motor	

4 CONTROL PANEL

The form of the control panel depends on the styling (Delta - Sigma) and the number of pushbuttons (4 or 5).

Example of "Delta" styling control panel

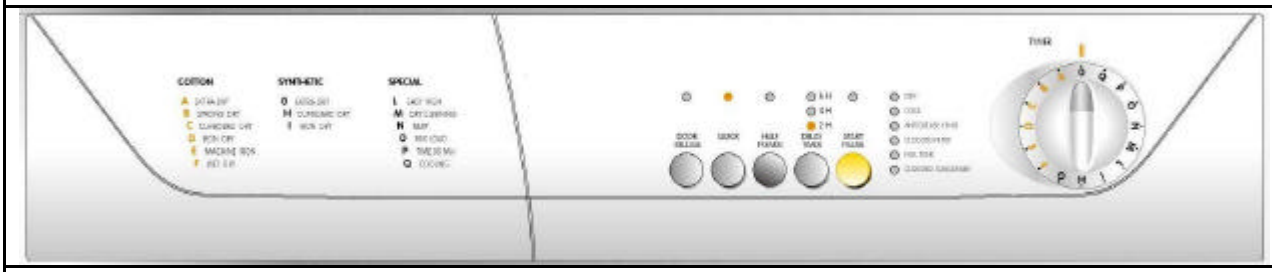

Example of "Sigma" styling control panel

4.1 Four-pushbutton control panel

The control panel - as well as the four pushbuttons - features ten LEDs and a programme selector. The options can be selected only after selecting a drying programme using the selector. In this situation, the phase LEDs light and LED L4 (start/pause) flashes. When an option is selected, the corresponding LED lights.

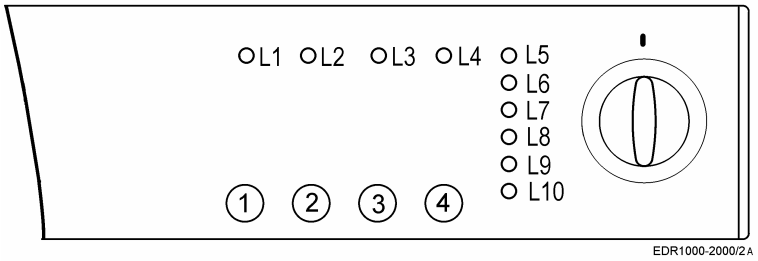

The functions of the pushbuttons and the LEDs depend on the configuration code of the appliance; the configuration used in most models is shown below.

Pushbuttons	"CYCLE PHASE" LEDs	"WARNING" LEDs
1 – No buzzer **2** – "Quick" **3** – Delicate drying **4** – Start/Pause	**L5** – Drying **L6** – Cooling **L7** – Anti-crease/End-of-cycle	**L8** – Filter cleaning **L9** – Canister full **L10** – Condenser cleaning

4.2 Five-pushbutton control panel

As well as the five pushbuttons, the control panel features thirteen LEDs and a programme selector.
The options can be selected only after selecting a drying cycle using the selector. In this situation, the phase LEDs light, and LED L7 (start/pause) flashes. When an option is selected, the corresponding LED lights.

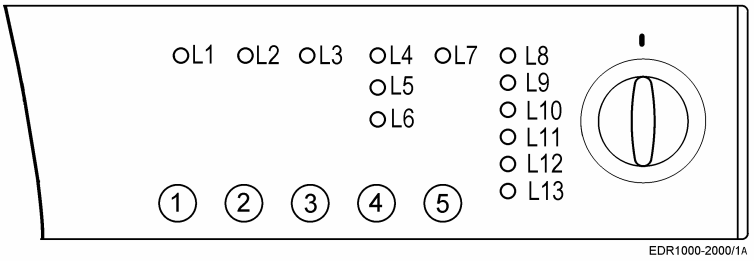

The functions of the pushbuttons and the LEDs depend on the configuration code of the appliance; the configuration used in most models is shown below.

Pushbuttons	"CYCLE PHASE" LEDs	"WARNING" LEDs
1 – No buzzer or "Quick" **2** – "Quick" or No buzzer **3** – Delicate drying **4** – Delayed start **5** – Start/Pause	**L8** – Drying **L9** – Cooling **L10** – Anti-crease/End-of-cycle	**L11** – Filter cleaning **L12** – Canister full **L13** – Condenser cleaning

4.3 Description of pushbuttons and LEDs

4.3.1 "NO BUZZER" pushbutton

This option can be selected only when the dryer is in "selection" mode (set-up).
Press this pushbutton to disactivate the buzzer function. The LED lights to indicate this selection. To re-activate the buzzer function, press the pushbutton again; the LED will switch off. *Even when the buzzer function is disactivated, the buzzer will continue to signal alarm conditions and warnings.*

“NO BUZZER” (not only for the affected cycle)

Setting to be made during the selection phase (set-up):
press simultaneously for two seconds the pushbuttons 1/2 for the four-pushbutton control panel and 2/3 for the five-pushbutton panel.
To reset the buzzer press the pushbutton combination relative to the control panel until the buzzer emits a “beep”.

4.3.2 "QUICK" pushbutton

Select this option to reduce the duration of the drying cycle selected.
The corresponding LED lights when the "QUICK" option has been selected. If the button is pressed again, the LED will switch off to indicate that the option has been disactivated.

4.3.3 "DELICATE DRYING" pushbutton (half power)

This dryer features a heating group with two separate heating elements whose power varies according to the model.
When this pushbutton is pressed once, the electronic control system switches off the lower-power heating element, and the corresponding LED lights to indicate that the option has been selected. If the pushbutton is pressed again, the LED switches off to indicate that the option has been disactivated, and the heating element switches on again during the cycle.

4.3.4 "DELAYED START" pushbutton

The "DELAYED START" option must be selected before pressing START/PAUSE.
This option enables the user to delay the start of the drying cycle.

The delayed-start function consists of three combinations, depending on the configuration of the dryer:

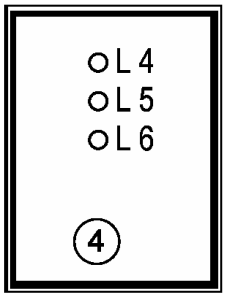

Led	Delay time (hours)		
	Version 1	Version 2	Version 3
L4	3	6	9
L5	2	4	6
L6	1	2	3

Press the pushbutton to select the delay time. Each time the button is pressed, the time indicated by the corresponding LED will change, starting from the maximum delay time and decreasing to the minimum time; pressing the button again at this point will cancel the delayed-start option.
If START/PAUSE is pressed during the delayed-start countdown, the dryer goes into standby mode; press START/PAUSE again to resume the countdown from the point at which it was interrupted.

4.3.5 "START/PAUSE" pushbutton

- **Start**

  When a drying programme has been selected using the programme selector, the LEDs for the three phases (drying, cooling and - if featured - anti-crease/end of cycle) light and the START/PAUSE LED flashes.
  After selecting the desired option(s), press this button to start the cycle. The corresponding LED, as well as the drying phase LED, remains lit.
- **Pause**

  If START/PAUSE is pressed while a drying cycle is being performed, the dryer interrupts the cycle and the appliance goes to PAUSE mode; the corresponding LED flashes.
  Certain options may be modified while the appliance is in PAUSE mode.
  Press START/PAUSE again to resume the cycle from the point at which it was interrupted.

4.3.6 "CYCLE PHASE" LEDs

- **Drying**: lights during programme selection and when the dryer is performing the DRYING cycle.
- **Cooling**: lights during programme selection if the programme selected includes a COOLING phase, and also when the dryer is performing the COOLING cycle.
- **Anti-crease / End of cycle**: lights during programme selection if the programme selected includes an ANTI-CREASE phase; it also lights while the dryer is performing the ANTI-CREASE phase and at the END of the CYCLE.

4.3.7 WARNING LEDs

- **Filter cleaning**: lights when the dryer has completed the cycle to remind the user to clean the fluff filter.
- **Canister full**: lights during the drying cycle if the electronic circuit detects the closure of the floating microswitch, and at the END of the CYCLE to remind the user to empty the canister.
- **Condenser cleaning***:* lights after 80 drying cycles.

4.4 Programme selector

The 16-position programme selector (with incorporated ON/OFF switch) is built into the board.
The first nine positions are common to all versions (i.e. always select the same programmes); programmes 10 to 14 vary according to the configuration of the appliance.

SELECTOR POSITION	CYCLE
0	OFF/CANCEL
1	EXTRA-DRY COTTON
2	CUPBOARD-DRY COTTON (EXTRA)
3	CUPBOARD-DRY COTTON (NORMAL)
4	SLIGHTLY DAMP COTTON
5	IRON-DRY COTTON
6	MACHINE-IRON COTTON
7	EXTRA DRY - SYNTHETICS
8	CUPBOARD DRY - SYNTHETICS
9	IRON-DRY - SYNTHETICS
10	Configurable
11	Configurable
12	Configurable
13	Configurable
14	Configurable
15	COOLING

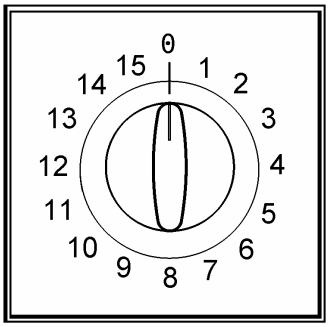

Configurable programmes
Positions 10 - 14 can be configured for the following cycles

SELECTOR POSITION	CYCLE
10, 11, 12, 13, 14	DURATION 30 MINUTES
	DURATION 60 MINUTES
	DURATION 90 MINUTES
	EASY-IRON
	DRY CLEANING
	BABY
	DELICATES
	WOOL

4.5 Options

The table below lists the possible options for the drying programmes, their compatibility with other options and with the various cycles, and when they can be selected or modified.

			OPTIONS			
			DELAYED START	DELICATE DRYING (half power)	QUICK	NO BUZZER
Compatibility with programmes	COTTON	EXTRA-DRY	X	X	X	X
		CUPBOARD-DRY (EXTRA)	X	X	X	X
		CUPBOARD DRY (NORMAL)	X	X	X	X
		SLIGHTLY DAMP	X	X		X
		IRON-READY	X	X		X
		MACHINE IRONING	X	X		X
	SYNTHETIC	EXTRA-DRY	X	X		X
		CUPBOARD DRY	X	X		X
		IRON READY	X	X		X
	TIME	90 min.	X	X		X
		60 min.	X	X		X
		30 min.	X	X		X
	EASY IRON		X	X		X
	DRY CLEANING		X	X		X
	BABY		X	X		X
	MIXED LOADS		X			X
	WOOL		X	X		X
	COOLING					X
Compatibility with options	DELAYED START			X	X	X
	DELICATE DRYING (half power)		X			X
	QUICK		X			X
	NO BUZZER		X	X	X	
Phases in which selection / modification is possible	SELECTION (set-up)		X	X	X	X
	DRYING (paused)					X
	COOLING (paused)					X
	ANTI-CREASE (paused)					
	DELAYED START (paused)		X	X	X	X

4.6 Adjusting the level of conductivity

The conductivity of the water used to wash the fabrics varies from zone to zone. The conductimetric sensor is calibrated to a standard value: any major variations in the level of conductivity may affect the final drying result (i.e. the washing may be too dry or too humid):

These variations are more noticeable in the "slightly damp" or "iron-ready" cycles; the "cupboard dry cycles are almost entirely unaffected by variations in conductivity.
The sensitivity of the conductimetric sensor can be adjusted according to the conductivity of the water as follows:

4.6.1 Procedure

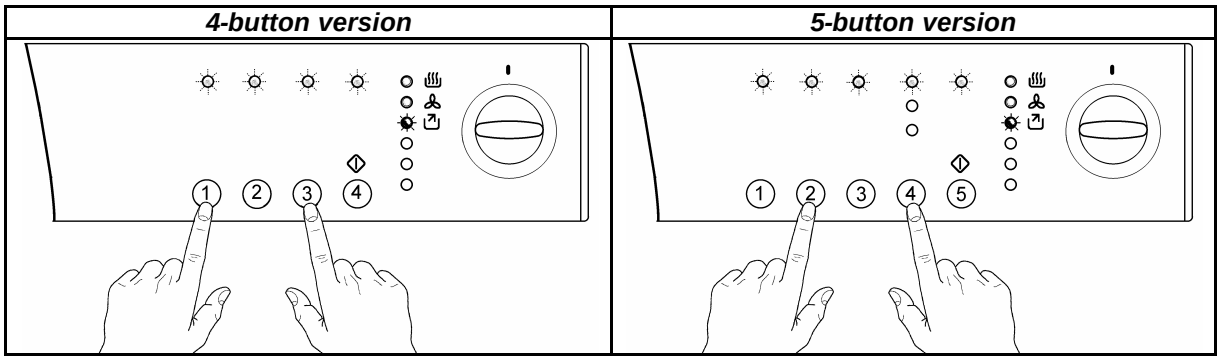

To access adjustment mode:

1. Turn the programme selector to switch on the appliance
2. In selection mode (set-up), simultaneously press the following buttons:
   ⇨ buttons **1** and **3** for the four-button version
   ⇨ buttons **2** and **4** for the five-button version
3. Hold the buttons down until the LEDs above each begin to flash, the buzzer sounds and one of the LEDs indicating the drying phase lights (approximately 5 seconds).

Adjusting the level of conductivity:
⇨ Press the START/PAUSE button sequentially: the level of conductivity is indicated by the phase LEDs, which light in various combinations as follows:

LED lit		Conductivity	Approximate value (mS/cm)
○ ○ ●	End of cycle	Low	< 300
○ ● ○	Cooling	Medium	300 - 600
● ○ ○	Drying	High	> 600

Normally, the appliance is factory-set to the lowest level; however, certain models may be configured differently. Your local water supply company can give you information concerning the conductivity of the water in your area.

Memorizing the new setting:
1. Simultaneously press the following buttons:
   ⇨ buttons **1** and **3** for the four-button version
   ⇨ buttons **2** and **4** for the five-button version
1. Hold the buttons down until the LEDs above each (except the PAUSE LED) stop flashing and the buzzer sounds.

4.7 Description of operation

4.7.1 Selection phase

When the selector is turned from OFF to a drying programme, the LEDs corresponding to the phases of the programme light, and the START/PAUSE LED begins to flash.
During this phase ("selection" or "set-up" phase) the various options can be entered, and the corresponding LEDs will light.
The drying cycle commences as soon as the START/PAUSE pushbutton is pressed.

If an option that is incompatible with the selected programme is entered, all the phase/warning LEDs flash three times and the buzzer sounds to warn the user that the option is incorrect.

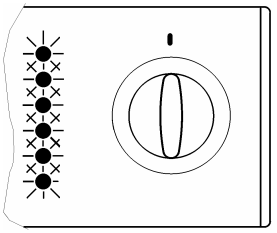

If the programme selector is turned after selecting the options but before pressing START/PAUSE, the options selected will be cancelled.

4.7.2 Cycle operation

A drying cycle starts after (a) a programme has been selected using the selector, (b) one or more options (if desired) have been selected and (c) the START/PAUSE pushbutton has been pressed.
The LED corresponding to the START/PAUSE button remains lit and, at the same time, the LED corresponding to the phase currently being performed lights.
The drying cycle consists of the following phases:

- **DRYING**
  If the cycle is automatic, its duration will be the time necessary to remove the humidity until the desired degree of final humidity is reached (maximum cycle time is 180 minutes for full power and 240 minutes for half power).
  If the cycle is timer-controlled, the duration will be the time selected by the user.

- **COOLING**
  For timer-controlled cycles, the maximum duration of the cooling phase is 10 minutes; for automatic cycles the duration depends on the temperature inside the drum (i.e. may be shorter).

- **ANTI-CREASE**
  The duration of the anti-crease cycle is 30 minutes.

No modifications to the programmes can be entered after the drying programme has started.
If the position of the selector is changed, or if one of the option buttons is pressed, all the LEDs begin to flash and the buzzer sounds to warn the user that an incorrect operation has been attempted.
The options can be selected only after selecting a drying programme and before pressing START/PAUSE.
To cancel a drying cycle, it is necessary to turn the programme selector to OFF.

4.7.3 Operation in PAUSE mode

If START/PAUSE is pressed while a drying cycle is being performed, the dryer interrupts the current cycle and enters PAUSE mode. The corresponding LED lights.
If the selector is turned, all the phase LEDs flash three times and the buzzer sounds to alert the user of the error. In this situation, only certain options can be modified (see table of options, page 10).
If the button relative to an option that cannot be selected is pressed, the corresponding LED flashes and the buzzer sounds to warn the user of the error.
When START/PAUSE is pressed again, the drying cycle resumes from the point at which it was interrupted.

4.7.4 Operation in DELAYED START mode

This function is possible only on appliances with five-button control panels.
The delay time option is configurable; therefore, certain dryers can be set to 1-2-3 hours, some to 2-4-6 hours, the others to 3-6-9 hours.
The delay time must be entered before pressing START/PAUSE.
To select this option, press DELAYED START as follows:

- when pressed once, the LED corresponding to the maximum delay time lights.
- when pressed twice, the LED corresponding to the intermediate time lights.
- when pressed three times, the LED corresponding to the shortest delay time for the start of the drying cycle.

This option can be cancelled in one of three ways:

- by pressing the button for the fourth time
- by turning the selector knob to OFF
- by turning the selector knob to any position (all the options are cancelled).

To start a cycle using the DELAYED-START option, use the selector knob to select a drying programme, then press DELAYED START and select the desired delay time for the start of the cycle, then press START/PAUSE. The dryer will remain in standby mode until the delay time has elapsed, after which the cycle will start automatically.
If the selector is turned during the delayed-start countdown, or if an option is selected during this time, the phase LEDs flash three times and the buzzer sounds to warn the user of the error.
If the START/PAUSE button is pressed during this drying cycle, the dryer goes to STANDBY mode; when START/PAUSE is pressed again, the cycle resumes from the point at which it was interrupted.

4.7.5 Buzzer

The electronic control system also features a buzzer which sounds in the following circumstances:

Type of sound	***Meaning***
1 “bip”	Programme selection
	Option selection
3 “bips”	Incorrect selection
1 “bip” every 24 seconds	Anti-crease phase
1 “bip” every 15 seconds	End of cycle
Sequence of 4 “bips” of different tonality, repeated every 7 seconds	Canister full
	Door of heat exchanger open
	Condenser clogged

4.7.6 Power failure

The table below shows how the dryer behaves in the event of a power failure during a drying cycle.

Before the power failure	***After power is restored***
Set-up	Set-up
Drying cycle	Pause
Cycle paused	Pause
Anti-crease phase	End of cycle
Delayed-start cycle	Delayed-start cycle paused
Delayed start cycle paused	Delayed start cycle paused
End of cycle	End of cycle
"Canister full" alarm	"Canister full" alarm

5 DEMO mode

This is a demonstration function that can be used by the retailer to demonstrate the operation of the appliance to customers. The duration is about five minutes.
When the appliance is in DEMO mode, the heating elements are not powered and the various phases are of abbreviated duration; the washing inside the drum is not controlled in any way.

5.1 Selecting DEMO mode

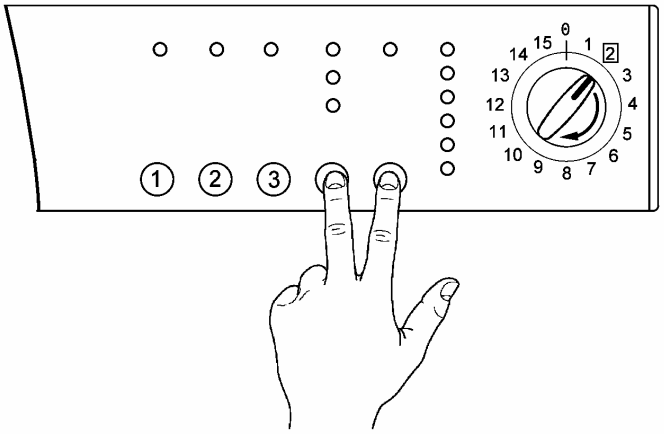

1. The appliance must be switched off.
2. Press START/PAUSE and any of the option buttons simultaneously.
3. Holding the two buttons down, switch the appliance on by turning the programme selector knob two positions clockwise.
4. Hold the two buttons down until the LEDs begin to flash (about 5 seconds) and the buzzer sounds.
5. Select the various options.
6. Press START/PAUSE to start the DEMO cycle.

5.2 Exiting DEMO mode

- To exit DEMO mode, switch off the appliance by turning the programme selector to **0** (zero)

6 STRUCTURAL AND FUNCTIONAL CHARACTERISTICS

6.1 Drying circuit

Version with canister in upper section	Version with canister in lower section
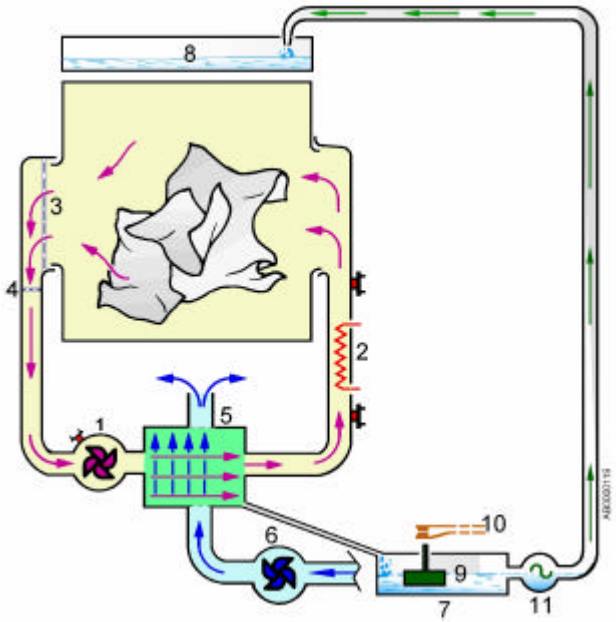	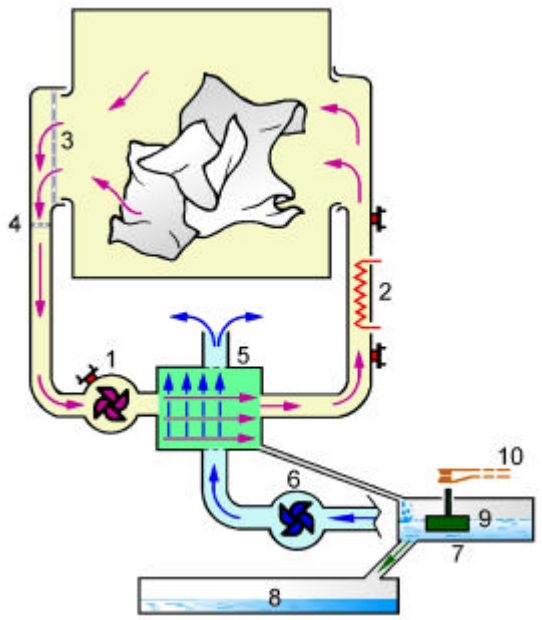

There are two air circuits inside the dryer:
- the first is a warm-air circuit, which is sealed within the appliance
- the second is an open cold-air circuit, which circulates air from the ambient through certain sections of the appliance

In the sealed warm-air circuit, the air circulates inside the appliance:
The fan (1), ducts the air through a heat exchanger (5), and then to the heater unit (2). The heater unit heats the air, which is then ducted into the drum through the perforations in the rear flange of the drum. The warm, dry air passes through the wash load, which is agitated by the rotation of the drum, and removes the humidity from the fabrics; the air, which is now warm and humid, then passes through the front aperture of the drum via the fluff filter (3) and the lower filter (4), then the air is ducted by the fan (1) to the heat exchanger (5), where the humidity is condensed.
The air coming from the heat exchanger is now dry and the cycle continues as described above.

The cold-air circuit (the air circulates in one side of the appliance) is not sealed.
The fan (6) draws in air through an air intake on the rear of the appliance, and ducts the air to the heat exchanger (5), cooling it, after which the air is expelled on the opposite side of the heat exchanger dissipating inside the appliance and exiting from the venting grille in the plinth.

The warm and cold air circuits cross inside the heat exchanger (5), which results in a thermal exchange which condenses the humidity contained in the warm air.

The condensation water, which forms in the heat exchanger, is collected in a sump (7) which contains a float (9).
- In versions with the canister in the upper section, a pump (11) ducts the water from the sump (7) to the canister (8). When the canister is full, any overflow is collected in the canister support and returned through a tube (not shown in the figure) into the sump (7). This causes the float (9) to rise, thus actioning the microswitch (10).
- In versions with the canister in the lower section, the water flows by gravity from the sump (7) into the canister (8); when the canister is full, the water level in the sump (7) rises. This causes the float (9) to rise, thus actioning the microswitch (10).

The electronic control system detects the closure of the microswitch, cuts off the power to the appliance and switches on a LED warning the user that the canister is full.
The tank capacity is about 4 lt., which is sufficient for one drying cycle.

6.2 Structural characteristics

Version with canister in upper section	Version with canister in lower section
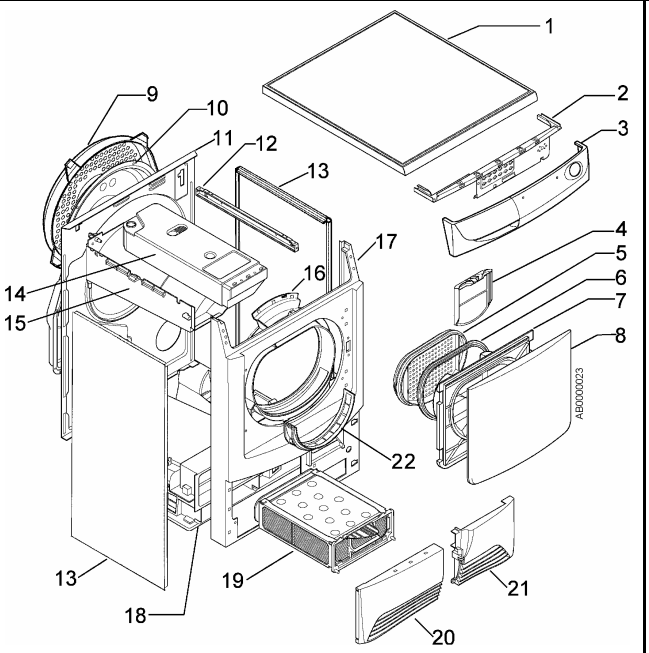	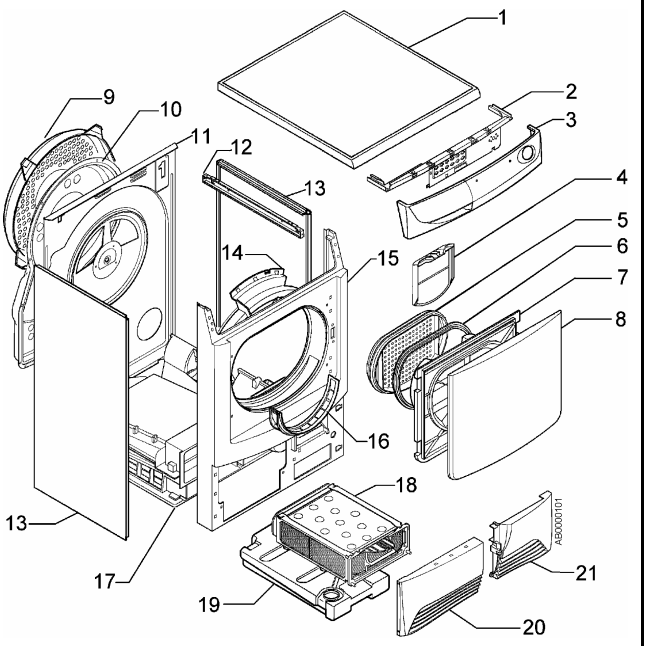
1 – Work top *2 – Control panel support* *3 – Control panel* *4 – Fluff filter* *5 – Fluff filter support* *6 – Door seal* *7 – Door internal frame* *8 – Door external frame* *9 – Rear panel cover protection* *10 – Rear panel cover* *11 – Rear panel* *12 – Cross-member* *13 – Side panels* *14 – Upper tank* *15 – Tank support* *16 – Duct* *17 – Front panel* *18 – Base* *19 – Heat exchanger* *20 – Panel* *21 – Plinth* *22 – Front fluff filter*	*1 – Work top* *2 – Control panel support* *3 – Control panel* *4 – Fluff filter* *5 – Fluff filter support* *6 – Door seal* *7 – Door internal frame* *8 – Door external frame* *9 – Rear panel cover protection* *10 – Rear panel cover* *11 – Rear panel* *12 – Cross-member* *13 – Side panel* *14 – Duct* *15 – Front panel* *16 – Lower fluff filter* *17 – Base* *18 – Heat exchanger* *19 – Lower canister* *20 – Panel* *21 – Plinth*

The front panel and the side panels are in enamelled sheet metal; the rear panel is in zinc-plated sheet metal. The panels are secured to the base by self-tapping screws.
The shaped carboran base houses the main components.

6.3 Drum

1 – Front flange
2 – Drum housing
3 – Rear flange
4 – Drum lifters
5 - Plastic band

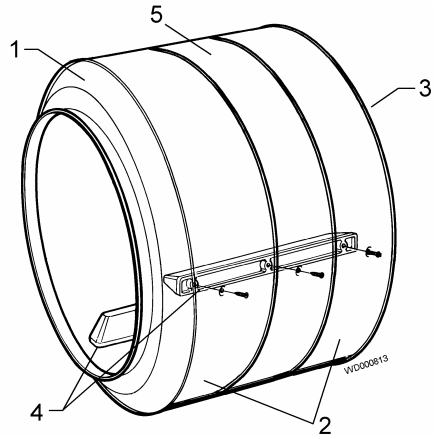

The drum consists of two half-shells (front and rear) which are joined together by a wide plastic band (5). Separation of the drum into two parts allows the conductimetric sensor to determine the conductivity of the washing inside the drum.
Parts 1, 2 and 3 are connected by crimping.
The plastic lifters are secured by screws to the internal wall of the drum.
The various elements which make up the drum are in sheet steel.
The rear drum shaft is fitted to the rear flange using eyelet rivets.

6.4 Air seals and drum shaft supports

6.4.1 Rear air seal

1 - Rear seal (fitted to rear panel)
2 - Drum
3 - Rear panel

6.4.2 Rear drum support

4 – Anti-clutching washer
5 – Fixing ring (Benzing)
6 – Rear panel
7 – Drum spindle
8 – Support with bushing (fitted to the rear panel)

6.4.3 Front drum support and air seal

9 – Drum
10 – Felt ring with tubular support
11 – Duct

6.4.4 Lower drum support

9 – Drum
10 – Felt ring with tubular support
11 – Duct
12 – Drum support roller

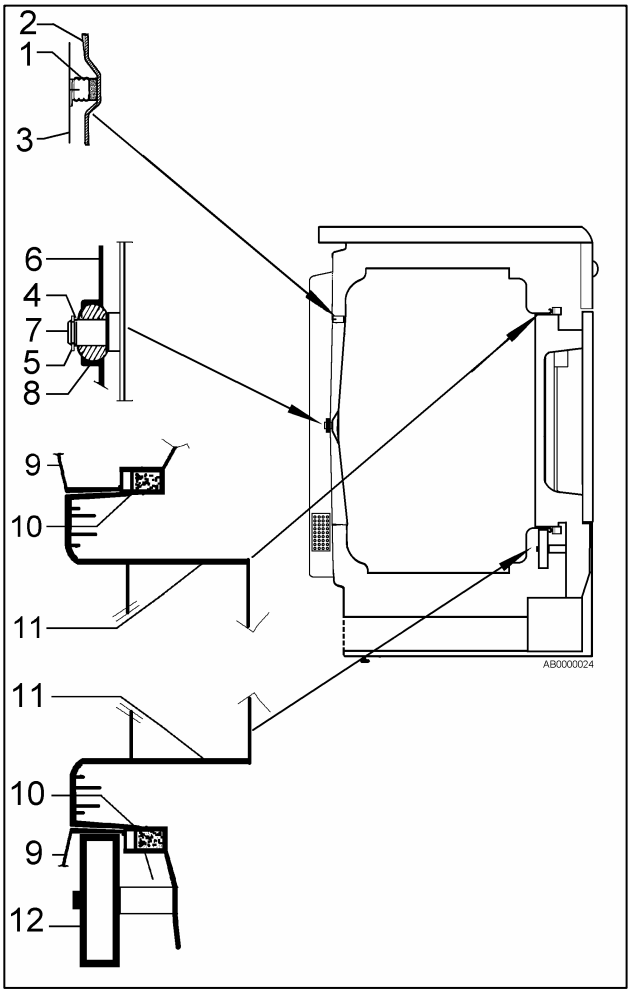

6.5 Hydraulic circuit (versions with canister in upper section)

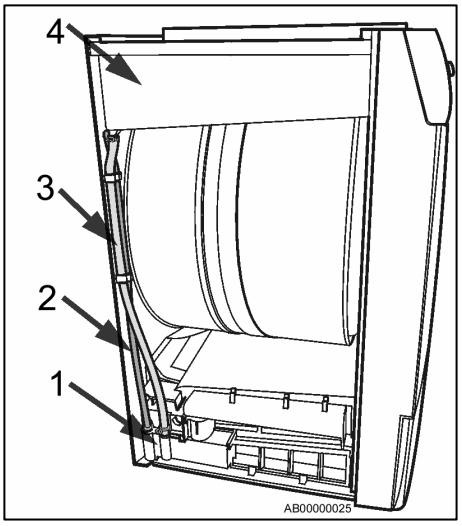

1 – Pump immersed in the sump
2 – Water fill hose to canister (Red)
3 – Overflow drain hose (Transparent)
4 – Canister

The condensation water is ducted from the sump (1) to the tank (4) by the pump immersed in the sump via the hose (2). When the canister is full the overflow is collected in the canister support and ducted to the sump through the hose (3).

6.6 Drum rotation

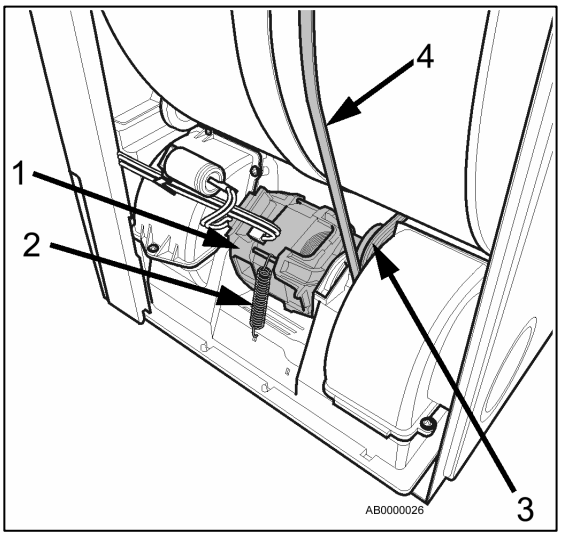

1 – Motor
2 – Belt tensioner spring
3 – Belt tensioner
4 – Belt

The drum is rotated by a belt (4), which is driven by the pulley of the drum motor (1) fitted to the base; on the bearing shield there is a belt tensioner (3), which has the function of increasing the winding angle of the belt to the drum and works in conjunction with the belt tensioner spring (2).
Bidirectional operation of the drum rotation is determined by the electronic board which inverts the motor power direction for brief periods. Reversal of the direction of rotation allows the clothes to unroll. During these short periods, the heater unit is switched off.

The heat exchanger features a safety device which ensures that, if the panel is opened to check the heat exchanger, a microswitch disconnects the dryer from the power supply.

7 ELECTRICAL COMPONENTS

7.1 Electronic board

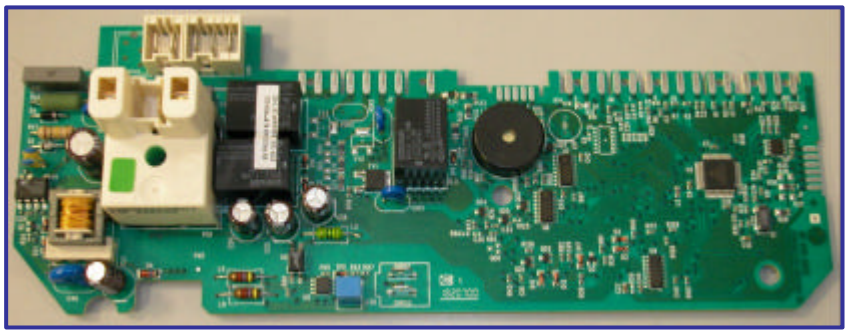

The electronic board is housed inside a plastic casing and secured behind the control panel support.
The board is available in two basic versions: one with four pushbuttons, the other with five.

1. *Electronic board - casing*
2. *Cover for connectors*
3. *Selector knob spindle*
4. *Support for pushbuttons*
5. *Pushbutton*
6. *LED diffuser*

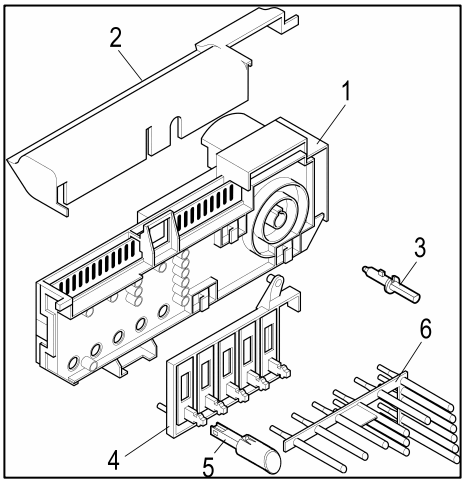

7.1.1 Electronic board functions

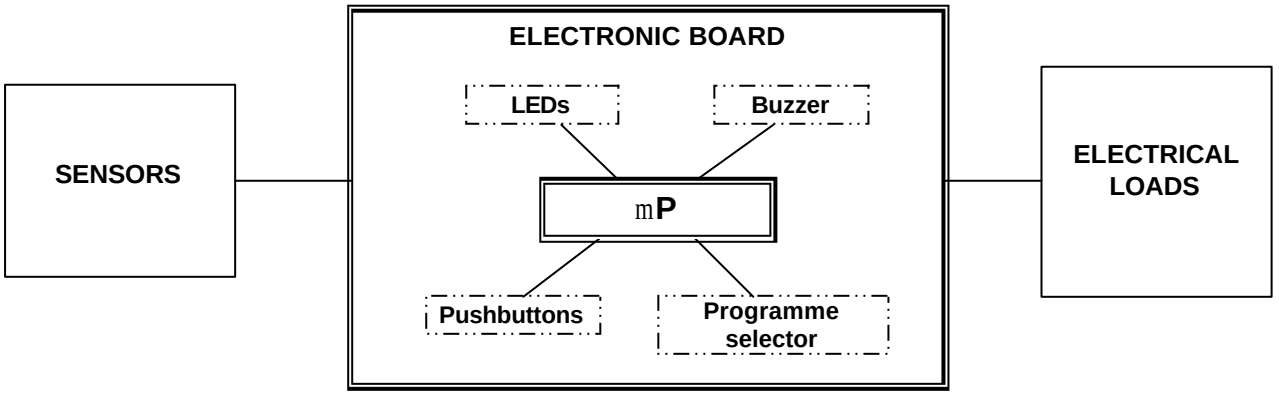

- ⇨ The electronic board powers the main components: motor, pump (for dryers with canister in the upper section), heater and door interlock.
- ⇨ The board also controls the door interlock, the temperature of the air inside the dryer (using an NTC sensor), the level of humidity of the washing (using a conductimetric sensor) and the level of condensation water in the canister.
- ⇨ The programme selector, pushbuttons and the buzzer are incorporated in the board.

7.1.2 General structure of board memory

The system features an EEPROM, positioned externally to the microprocessor, which memorizes the configuration data, the description of the cycle, the status of the appliance in case of a power failure, and the alarms.

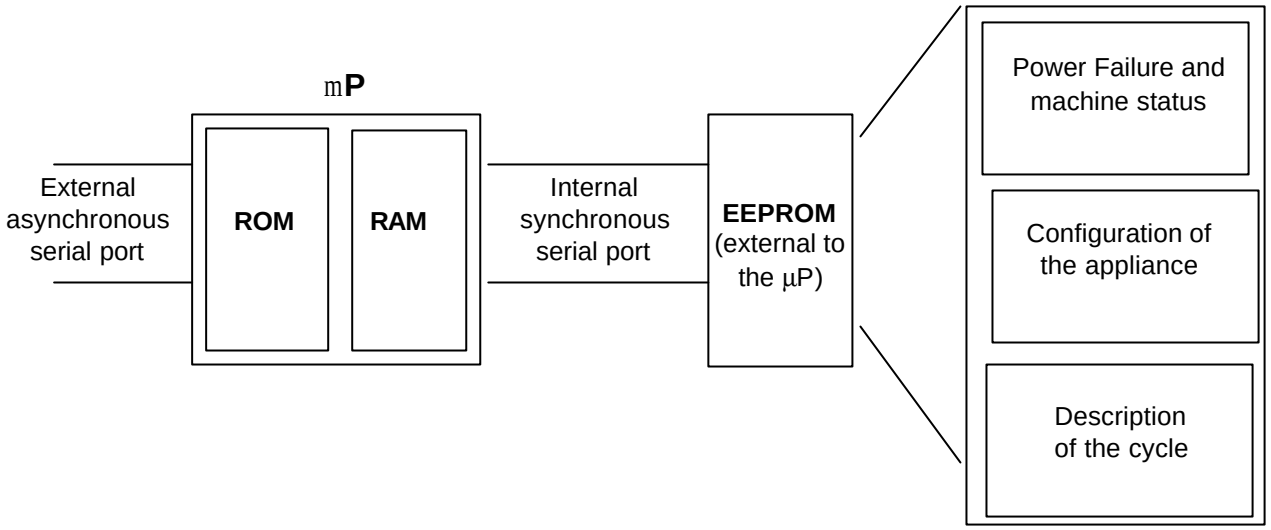

7.1.3 ROM

This area of the memory contains the "firmware" code including the functionalities of the appliance:

- ⇨ Control of electrical loads (motor, pump, heater)
- ⇨ Control of the sensors (NTC, conductimetric sensor, door switch status)
- ⇨ Control of the user interface
- ⇨ Control of the serial port
- ⇨ Control of power failures and alarms
- ⇨ Execution of the drying programme

In standard-production appliances, this area is a **R**ead-**O**nly **M**emory, and thus cannot be modified.

7.1.4 RAM

This memory contains the variables, i.e. all the dynamic information used during execution of the programme:

- ⇨ Machine status
- ⇨ Cycle selected
- ⇨ Alarms

The contents of this memory are cancelled each time the appliance is disconnected (by switching off or in the event of a power failure).
The contents can be read using a computer connected via a DAAS interface.

7.1.5 EEPROM

The EEPROM contains data of various types:

- ⇨ **Power failure and machine status**, i.e. the information necessary to resume operation of the appliance after a power failure.
- ⇨ **Configuration of the drying cycle**: this file describes the various steps in the drying cycle for each family of appliances (vented, condenser etc.).
- ⇨ **Machine configuration**: the data contained in this area of memory define the configuration of the individual appliance, and are interpreted by the functional software. These files define the following:
  - Programmes
  - Number of buttons and their functions
  - Operation of the LEDs
  - Operation of the buzzer
  - Operational limits (voltage/frequency)
  - Identification of the appliance (PNC + ELC + serial number)
  - Heater unit power
  - Preferential direction of motor rotation

7.2 Conductimetric sensor

The conductimetric sensor consists of an electronic circuit (positioned inside the power board) and a section located externally to the board which consists of the wiring, two brushes (sensors positioned in contact with the tub shells) and the two tub shells themselves.

The first brush positioned in contact with the front tub shell is fitted to a hinged support on the duct, and is connected by the wiring to the electronic circuit. The second brush is positioned in contact with the drum spindle housed in the spindle casing. This sensor is connected to the electronic circuit via the cabinet, which represents the mass of the appliance's electronic circuit.
The two halves of the drum are separated by an insulating strip, and therefore the impedance between the front and rear shells (to which the sensors are connected) is infinite when the drum is empty. The impedance varies according to the wash load, the type of fabric and the degree of humidity.

The impedance is between about 1MΩ and 25MΩ. This value is converted into an oscillation of between about 260Hz and 0Hz; when processed by the electronic circuit (fuzzy logic), this value determines the duration of the cycle and the final humidity.

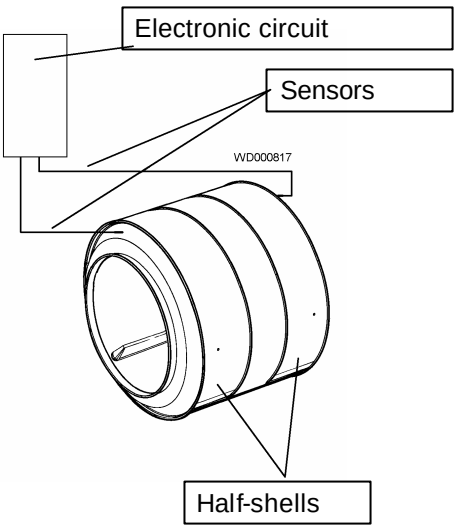

7.3 Terminal block with incorporated suppressor

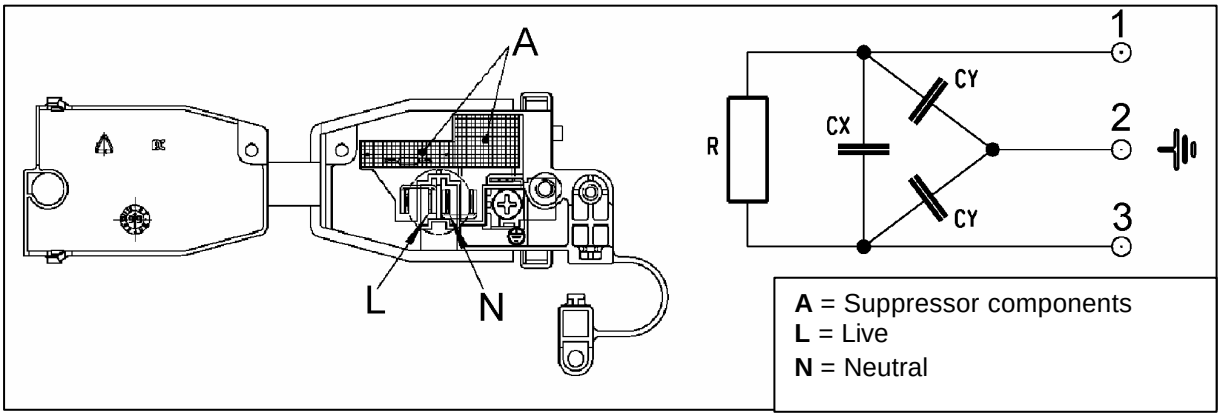

The suppressor, which is incorporated in the terminal block, prevents radio disturbance generated by the dryer from entering the power lines.
This device functions correctly only if the appliance is grounded.

Checking for efficiency:

Use a tester to measure the resistance across the following terminals
⇨ 1 – 2 = ∞
⇨ 2 – 3 = ∞
⇨ 1 – 3 =~ 2MΩ

7.4 Heater unit

1 - Filament heating element
2 - Ceramic supports
3 - Sheet metal casing
4 - TH1 Safety thermostat (automatic reset)
5 - TH2 Safety thermostat

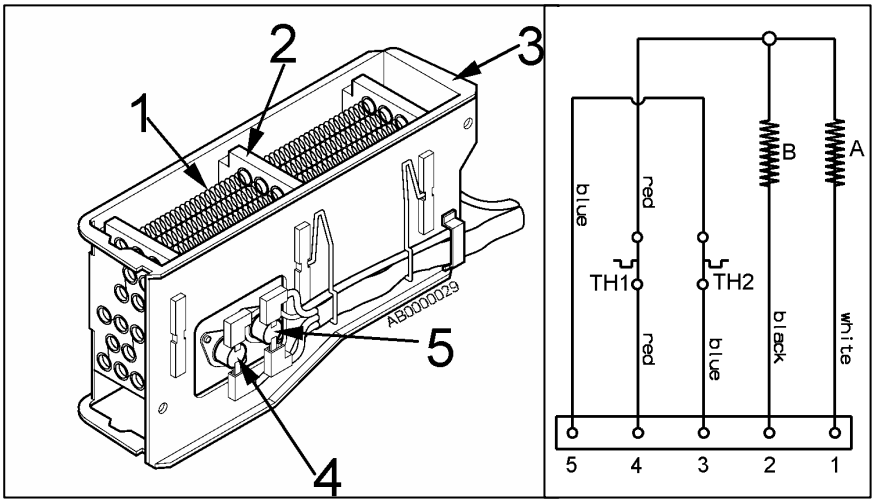

The heater unit consists of two wire heating elements with different powers. The two heating elements are fitted to ceramic supports, and the entire assembly is housed in a sheet metal casing.
Two safety thermostats (normally closed) are positioned to one side of the casing.

- TH1 (automatic reset) (4) intervenes at a temperature of 92±3°C, and disconnects both heating elements.
- Thermostat TH2 (5) intervenes at 160°C; when the contact opens, it remains open, permanently disconnecting all the electrical components in the appliance.

The heater unit is powered vi a two relays (RL1 and RL2) fitted to the board.

Heater unit versions					
Type	Total power (-2+ 8%): W Rated voltage: V	**2400** **240**	**2000** **230**	**2000** **240**	**2200** **240**
Branch A	Power (-2+ 8%): W Resistance: Ω	1400 36	1400 33	1400 36	1400 36
Branch B	Power (-2+ 8%): W Resistance: Ω	1000 51	600 78	600 85	800 63

IMPORTANT: In the event of a thermostat failure, the entire heater unit must be replaced!

7.5 NTC sensor

The NTC sensor is fitted to the hot air fan duct. This sensor consists of a resistor contained in a metallic capsule. Its resistance decreases as the temperature increases.
The electronic circuit reads the resistance (which varies with the temperature inside the dryer); when this resistance falls below a certain value, the heater unit is switched off. As the air cools, the resistance increases; when it reaches a given value, the electronic circuit re-connects the heater unit to the power supply. This occurs each time the temperature inside the dryer exceeds a given value, which varies according to the drying cycle that has been selected.

1 – NTC resistor
2 – Metallic capsule
3 – Terminals
4 – Plastic casing

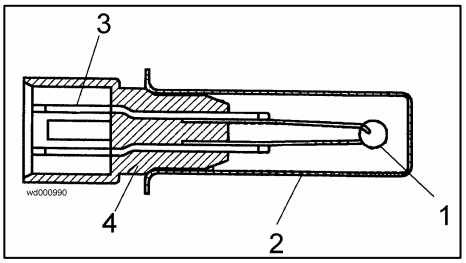

TEMPERATURE (ºC)	RESISTANCE		
	Rated value	**Maximum value**	**Minimum value**
20	6050	6335	5765
60	1250	1278	1222
80	640	620	660

7.6 Motor

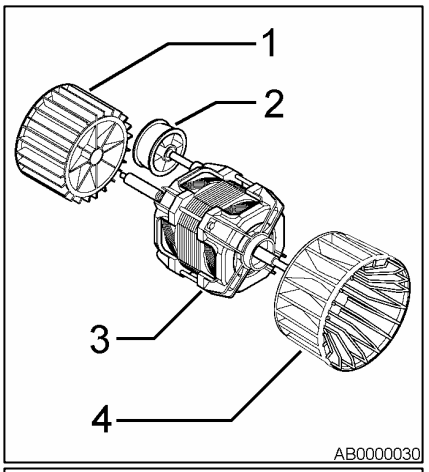

1 – Fan (inclined blades for cold air circulation)
2 – Belt tensioner
3 – Motor
4 – Fan (straight blades for warm air circulation)

The motor group consists of a belt tensioner (2), two fan blades (1 and 4) for circulating cold and warm air respectively, fitted to the motor shaft using bolts, and a single-phase asynchronous motor (3) featuring an overheating safety cut-out.
Important: when assembling the fan blades to the motor, do not reverse their positions, as this would cause incorrect air circulation inside the dryer.

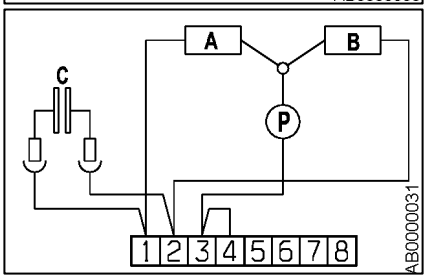

The efficiency of the motor can be checked by measuring the resistance across the windings:
Winding **A** 29 ohm approx. (contacts 1-3)
Winding **B** 29 ohm approx. (contacts 2-3)

The motor is powered by the electronic board via a relay (which determines the direction of rotation) and a triac.

7.7 Door interlock

The door interlock is an electromechanical device which powers the electrical loads only when the door is correctly closed and the programme selector knob is turned (ON/OFF - closed).
The interlock features a child safety device so that, in case of necessity, the door can be opened by pressing from inside the appliance.

When the door is **open**, the button on deviator **A** is held down by lever **B**; in this position, contacts 1-2 are closed.	When the door is **closed**, the latch **D** rotates spindle **C**, thus releasing lever **B**; the button on the deviator **A** changes position, closing contacts 1-3.	**Position of connector contacts**
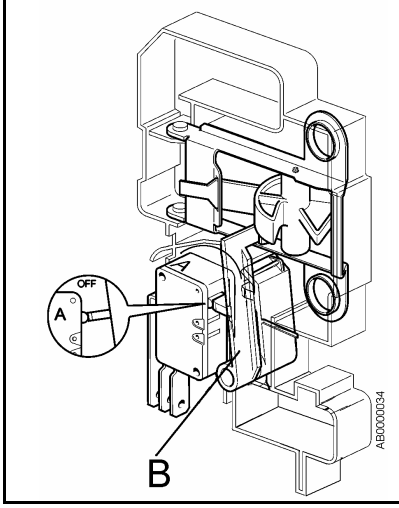	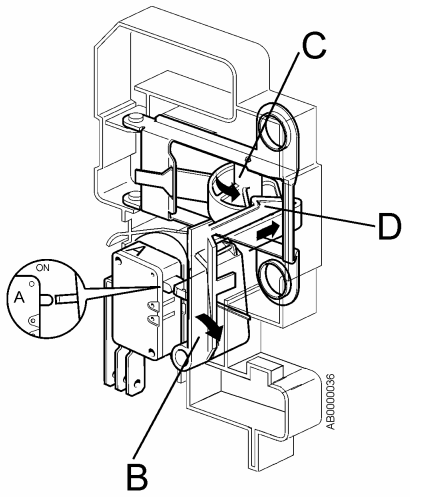	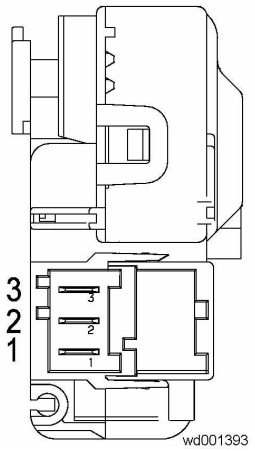

7.8 Canister filling pump (versions with canister in upper section)

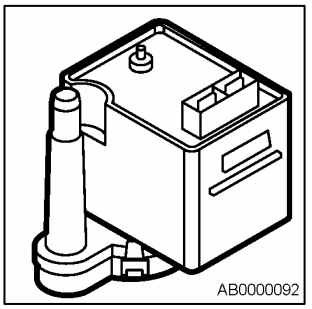

The pump is actioned by a synchronous motor with a power of about 17W. The function of the motor is to pump the condensation water from the sump to the canister. The pump, too, is powered by a triac.
The resistance of the stator winding is approximately 750 Ω.

8 ELECTRICAL CIRCUIT

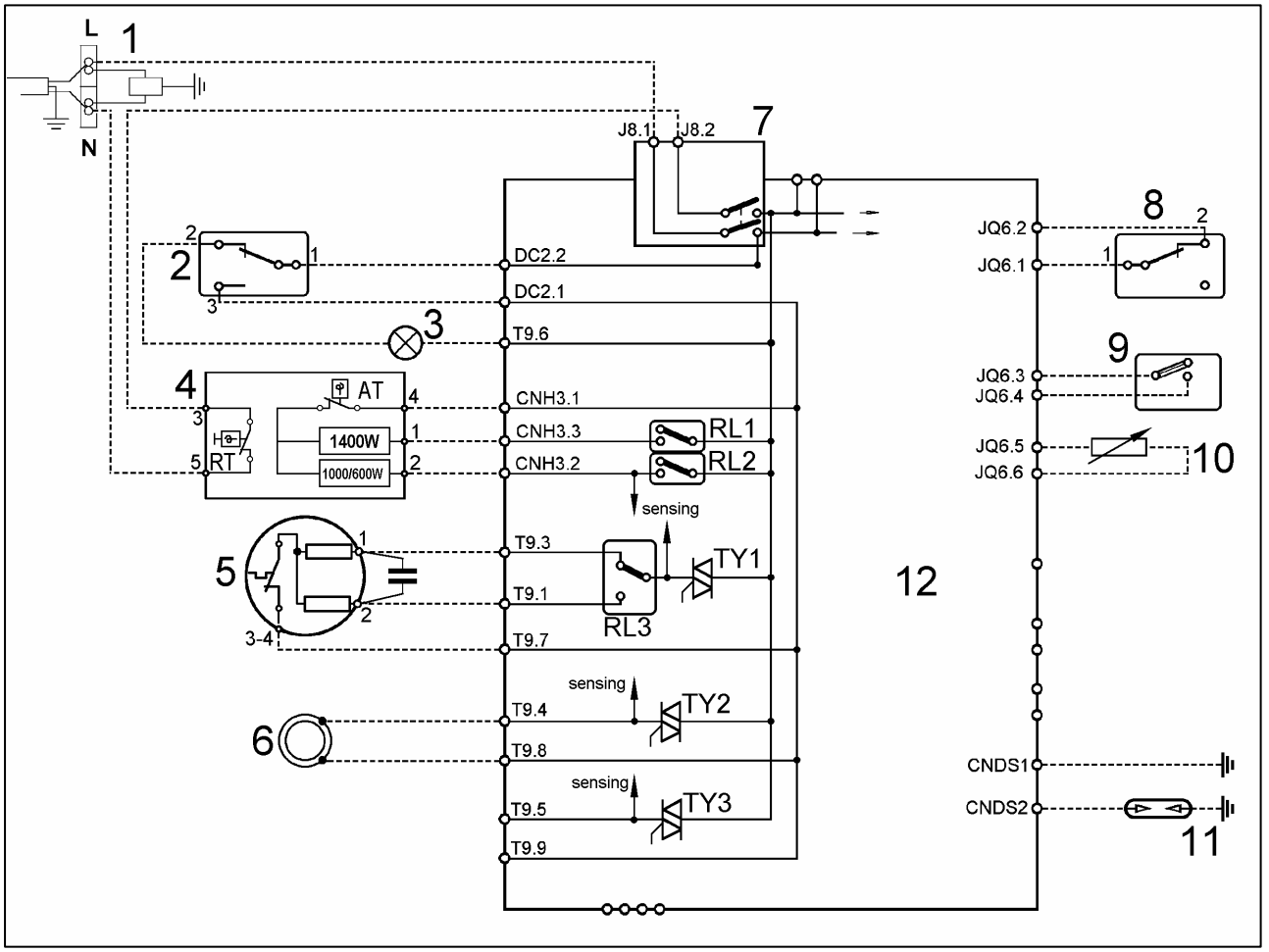

1. Suppressor	*7. Main switch (incorporated in selector)*
2. Door interlock microswitch	*8. Floating microswitch*
3. Drum light (certain models only)	*9. Heat exchanger microswitch*
4. Heater unit	*10. NTC*
5. Drum rotation motor	*11. Conductimetric sensor*
6. Pump	*12. Electronic board*

8.1 Electrical operation

The circuit diagram shows all the components of the dryer and their connections to the electronic board. The voltage in the pushbutton circuits, the electronic board, the conductimetric sensor and the NTC sensor is about 5V.

When the programme selector knob is turned, the two-pole switch (7) powers the electronic board. When the door is opened, the drum light (3) (if featured) lights.

To start the cycle, the door microswitch (2) and the microswitch on the front panel (9) must be closed.

When START/PAUSE is pressed, the cycle starts and the various loads are powered.

The heater unit (4) is powered via two relays (RL1 and RL2), which power the two branches of the heating element separately (at different powers). If the DELICATE DRYING option is selected, only the more powerful branch is powered (1400W).

The motor is powered via a TRIAC (TY1) which is piloted by the microprocessor. Reversal of the direction of rotation (to unroll the washing in the drum) is controlled by a relay (RL3).

For dryers with the canister in the upper section, the pump (6) is powered by a TRIAC (TY2).

When the canister and the sump are filled with water, the float moves upwards, opening the contacts of the microswitch (8). This causes the microprocessor to interrupt the drying cycle and to warn the user by sounding the buzzer and lighting the CANISTER FULL pilot light.

The NTC sensor (10) measures the temperature of the air inside the appliance, while the conductimetric sensor (11) determines the degree of humidity of the fabrics.

The microprocessor constantly monitors the correct operation of the components via a number of "sensing" lines: if a fault occurs, the appliance goes to ALARM mode.

9 DIAGNOSTICS SYSTEM

In diagnostics mode, it is possible to check the operation of the appliance and to read the alarm codes.

9.1 Access to diagnostics

1. The appliance must be switched OFF.
2. Press START/PAUSE and any one of the option buttons simultaneously.
3. Holding these two buttons down, switch the appliance ON by turning the programme selector knob one position clockwise.
4. Continue to hold down the buttons until the LEDs begin to flash and the buzzer sounds (about 5 seconds).

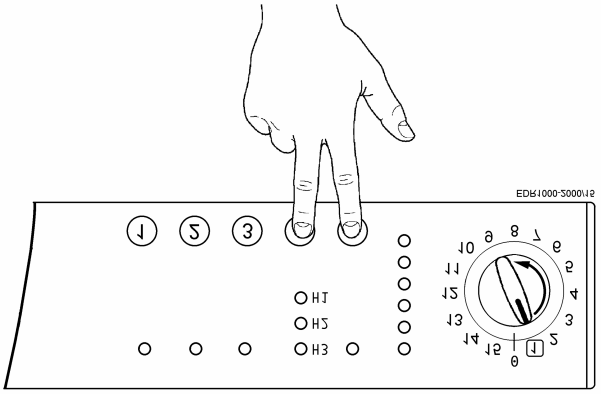

9.2 Exiting the diagnostics system

⇨ To exit the diagnostics system, turn the programme selector knob to **zero** to switch the appliance OFF, then switch it ON and OFF again.

9.3 Phases of the diagnostics system

After accessing the diagnostics system:

⇨ In the first position, the appliance tests the operation of the pushbuttons and the corresponding LEDs.

⇨ Turn the programme selector knob **clockwise** to perform the diagnostics test on the various components and to read the alarm codes.

IMPORTANT!

- The alarms remain active during component diagnostics testing. If an alarm should be displayed, turn the programme selector to the first position to exit the alarm situation, then continue the testing cycle (if the alarm is not repeated).
- In order to check for correct operation of the floating switch and the pump (models with canister in the upper section), the sump is filled with approximately 0.7 litres of water.
- For correct control of the conductimetric sensor in a condition of short-circuit (position 7), remove the cover and create a short-circuit between the two half-shells of the drum or between the front shell and ground. After entering this phase, the time available for creation of the short circuit is just one second; therefore, **prepare the short circuit before turning the programme selector knob to position seven** (it is advisable to do this in a position in which the drum is stationary, then pass quickly to this position). **If the short circuit is not performed correctly, the electronic board will display alarm E32** (sensor frequency too low). To exit the alarm condition, turn the programme selector knob to the first position.
- Open the condenser access panel and check that the switch operates correctly. The buzzer will emit four "bips" (in different tonalities), repeated every 7 seconds.

Selector position		Components activated	Operating conditions	Function checked
1	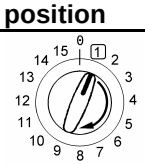	➢ All the LEDs light in sequence. ➢ When a button is pressed, the corresponding LED lights and the buzzer sounds.	Always activated.	Operation of the user interface.
2	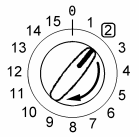	➢ For models with the canister in the lower section: If the floating switch is closed (canister full), the phase/warning LEDs flash; if the switch is open, they remain lit. ➢ Canister fill pump: (models with canister in upper section) with switch closed.	Door closed. Max. time 30 sec. Sump full (0.7 litres approx.)	Operation of the floating switch and canister fill pump.
3	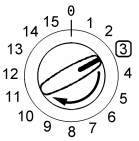	➢ Motor triac and relay. ➢ Canister fill pump always powered (only for models with canister in the upper section).	Door closed. Max. time 10 min. Pump 30 sec.	Controls counter-clockwise drum rotation.
4	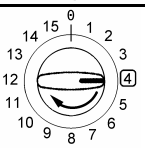	➢ Triac motor in stepping operation.	Door closed. Max. time 10 min.	Control of clockwise drum rotation (low speed for visual inspection of drum shell assembly).
5	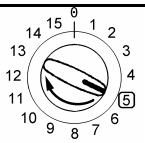	➢ Higher-power (1400W) heating element. ➢ Motor triac for ventilation.	Door closed. Max. time 10 min.	Heater unit (half power).
6	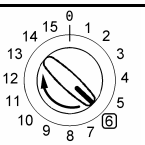	➢ Both branches of the heater unit. ➢ Motor triac for ventilation.	Door closed. Max. time 10 min.	Heater unit (full power).
7	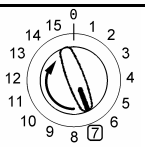	➢ Conductimetric sensor. This check has a duration of 4 sec. (**1 sec. to create the short circuit**). The phase/warning LEDs flash during this period. If the result is correct at the end, the LEDs remain lit; if not, the LEDs flash and alarm **E32** is displayed.	Door closed. **Short circuit between the two drum shells**.	Control of the conductimetric sensor when short-circuited.
8	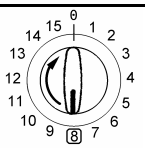	➢ Conductimetric sensor. This check has a duration of 4 sec. The phase/warning LEDs flash during this period. If the result is correct at the end, the LEDs remain lit; if not, the LEDs flash continuously.	Door closed.	Control of the conductimetric sensor when the circuit is open.
9	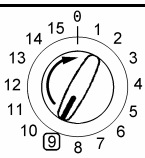	➢ No check. The phase/warning LEDs remain lit.	---	---
10	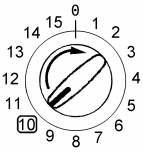	➢ Floating switch: in models with the canister in the upper section, the phase/warning LEDs flash if the switch is closed, and remain lit if the switch is open. ➢ Canister fill pump (models with canister in upper section only) with switch closed.	Door closed. Max. time 30 sec.	Operation of floating switch (sump empty)
11	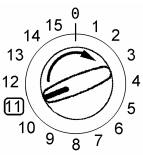	➢ Reading/cancellation of the last alarm code.	---	---
12-13-14-15		➢ All the LEDs light in sequence. ➢ When a button is pressed, the corresponding LED lights and the buzzer sounds.	Always activated	Operation of the user interface.

10 ALARMS

10.1 Displaying the alarms to the user

Operation of the alarms is configurable according to the model. Some or all of the alarms may be displayed to the user.

Normally, all alarms except E44, E52, E63, E94, EB2 are displayed to the user.

When an alarm condition occurs, the drying cycle may be interrupted or paused; in some cases, for the sake of safety, a forced cooling cycle is performed. In this case, the electronic board, if possible, disconnects the power relay from the heater unit and powers the motor of the drum cooling fan. The cycle remains active until the user switches off the appliance.

10.1.1 Alarm display during normal operation

The system displays the family of alarms to the user by a repeated flashing sequence of the ANTI-CREASE/END OF CYCLE LED (0.4 seconds on, 0.4 seconds off, with a 2.5 second pause between sequences).
The buzzer emits a series of "bips" in synchronization with the flashing of the LED.

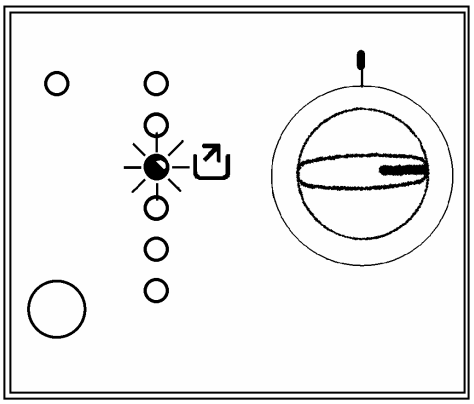

For example, in the case of alarm E53, the cycle would be interrupted and the ANTI-CREASE/END OF CYCLE LED would flash repeatedly in the sequence shown in the table.

The five flashes indicate the **first** of the two numbers in the alarm code E**5**3 (the alarms relative to the same function are grouped into families).

End of cycle LED	☀	○	☀	○	☀	○	☀	○	☀	○	○
Time (sec)	**0.4**	0.4	**0.4**	0.4	**0.4**	0.4	**0.4**	0.4	**0.4**	0.4	2.5
Value	*1*		*2*		*3*		*4*		**5**		Pause

Configuration errors (E93) are indicated by all the LEDs flashing.

10.2 Reading the alarm codes

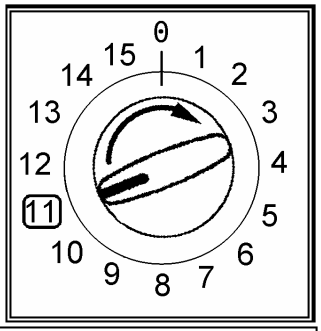

To read the last alarm code memorized in the EEPROM of the electronic board, proceed as follows:

- Access diagnostics mode (see paragraph 9.1)
- Turn the programme selector knob **clockwise** to the **eleventh position**.

10.2.1 Displaying the alarm code

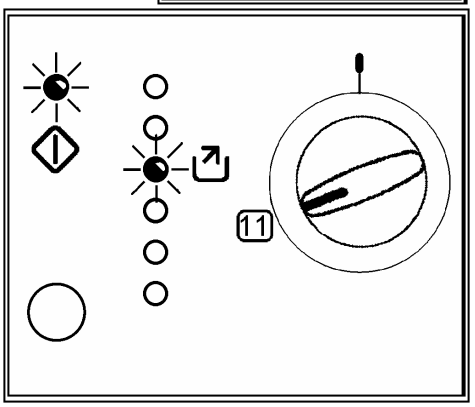

The alarm code is displayed by a repeated sequence of flashing of the ANTI-CREASE/END OF CYCLE LED (0.4 seconds on, 0.4 seconds off, with a pause of 2.5 seconds between sequences).
The buzzer emits a series of "bips" in synchronization with the flashing of the LED.

	⇨ **ANTI-CREASE/END OF CYCLE LED:** indicates the first number of the alarm code (family)
	⇨ **START/PAUSE LED:** indicates the second number of the alarm code (number within the family category).

N.B.:
- The first letter of the alarm code "**E**" (error) is not displayed, since it is common to all codes.
- The families of alarm codes are expressed in **hexadecimal**. Therefore;

⇨ **A** is represented by **10** flashes
⇨ **B** is represented by **11** flashes
⇨ ...
⇨ **F** is represented by **15** flashes

- **Configuration errors are displayed by the flashing of all the LEDs (user interface not configured).**

10.2.2 Example of display of alarm code

In the event of, for example, alarm E53 (problems with the motor triac), the code will be displayed as follows:

⇨ the sequence of **five** flashes of the ANTI-CREASE/END OF CYCLE LED indicates the first of the two numbers in the alarm code E"**5**"3, which represents the family and is displayed to the user.
⇨ the sequence of **three** flashes of the START/PAUSE LED indicates the second number E5"**3**".

Time (sec)	**0.4**	0.4	**0.4**	0.4	**0.4**	0.4	**0.4**	0.4	**0.4**	0.4	2.5
End of cycle LED	☀	○	☀	○	☀	○	☀	○	☀	○	○
Value	*1*		*2*		*3*		*4*		**5**		Pause
Pause LED	☀	○	☀	○	☀	○	○	○	○	○	○
Value	*1*		*2*		**3**		Pause				

10.3 Rapid reading of the alarm codes

The last alarm code memorized can be displayed even if the appliance is in normal operating mode (e.g. while the drying programme is being performed):

⇨ Press **START/PAUSE** and **any one of the option buttons** simultaneously for at least two seconds. The LEDs switch off, then display the flashing sequence that identifies the alarm code.
⇨ The alarm sequence continues to flash as long as the two buttons are held down.
⇨ The reading system is as described in paragraph 10.2.1.
⇨ The appliance continues the cycle while the alarm codes are being displayed. If the appliance is in programme selection mode, the options previously selected are stored in memory.

10.4 Cancelling the last alarm memorized

It is good practise to cancel the alarm code from memory:

- After reading the alarm, to check whether it is repeated during the diagnostics cycle.
- After effecting repairs to the appliance, to check whether it is repeated during testing.

1. Access diagnostics mode and turn the programme selector knob to the **eleventh** position (alarm reading).
2. Press **START/PAUSE** and **any one of the option buttons** simultaneously.
3. Hold down the START/PAUSE and option buttons for about 5 seconds.

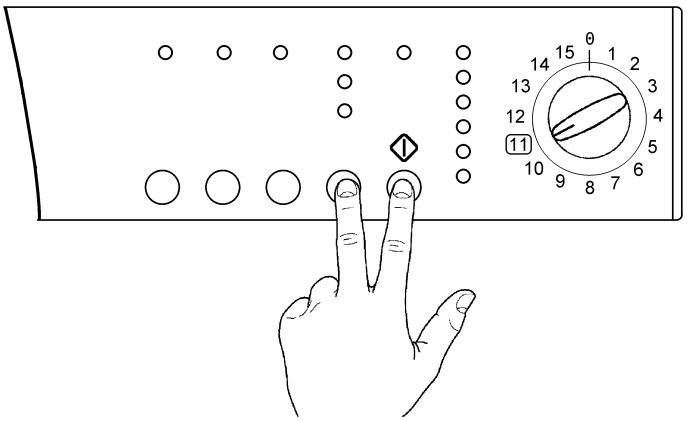

10.5 Notes concerning certain alarm codes

- **Configuration alarm E93:** When configuration alarms are displayed (when the appliance is switched on), the appliance is inoperative and all the LEDs light. It is not possible to access diagnostics mode; the only possible operation is that of switching off the appliance (selector knob on position "0").

- **Alarms EB1-EB2-EB3:** In the event of problems with the power supply, the appliance remains in alarm mode until the voltage and frequency are restored to within the normal limits or the appliance is switched off (selector knob on position "0"). Alarm family "**B**" is displayed and it is not possible to access diagnostics mode nor to use the "rapid alarm display" function. The complete alarm can be read only when the abnormal condition has terminated.

10.6 Table of alarms

Alarm	Description	Possible fault	Action/machine status	Reset command
E00	**No alarm**	---	---	---
E21	Canister fill pump triac faulty	Wiring faulty. Electronic board faulty.	Cycle interrupted	OFF
E22	Triac "sensing" circuit for the canister fill pump faulty	Electronic board faulty.	Cycle interrupted	OFF
E31	Conductimetric sensor signal frequency too high.	Electronic board faulty.	Alarm activated only during diagnostics	---
E32	Conductimetric sensor signal frequency too low.	Wiring faulty. Brushes worn/faulty. Electronic board faulty.	Cycle interrupted	OFF
E41	Power triac of door opening coil faulty.	Wiring faulty. Electronic board faulty.	Cycle interrupted	OFF
E42	Triac "sensing" circuit for powering the door opening coil faulty	Electronic board faulty.	Cycle interrupted	OFF
E43	Incongruency of the “sensing” signal of the door interlock	Door interlock faulty. Wiring faulty. Electronic board faulty.	Cycle interrupted	OFF
E51	Motor power triac short-circuited.	Motor faulty. Wiring faulty. Electronic board faulty.	Cycle interrupted.	OFF
E52	Intervention of motor overheating safety cut-out.	Motor faulty. Intervention of motor overheating cut-out. Wiring faulty. Electronic board faulty.	Power to the heater unit and reversal of the direction of rotation are interrupted. If the problem does not re-occur, the alarm is memorized and the cycle continues. If the fault persists after several attempts to supply power (about 35 min.), alarm E51 is generated	OFF
E53	Motor triac "sensing" circuit faulty.	Electronic board faulty.	Cycle interrupted.	OFF
E54	Motor inoperational.	Excessive wash load. Voltage too low. Motor/transmission system inoperative.	Cycle paused after several attempts at powering the motor.	Start
E61	Insufficient heating (maximum time exceeded)	Heater unit faulty. Wiring faulty. NTC sensor incorrectly calibrated/out of position. Electronic board faulty.	Cycle paused.	Start
E62	Power relay to heater unit faulty	Heater unit faulty. Wiring faulty. Electronic board faulty.	Forced cooling cycle.	OFF
E63	Intervention of auto-reset thermostat on the heater unit.	Thermostat faulty (replace heater unit). Heater unit faulty. Wiring faulty. Electronic board faulty.	Disconnects the power supply to the heater unit. If the problem does not re-occur, the alarm is memorized and the cycle continues. If, after several attempts to restore power, the fault persists, alarm E62 is generated.	OFF
E71	NTC sensor faulty.	NTC sensor faulty. Wiring faulty. Electronic board faulty.	Forced cooling cycle.	OFF

Alarm	Description	Possible fault	Action/machine status	Reset command
E91	Error in the communication between electronic board and control/display board	Wiring faulty. Electronic board faulty. Control/display board faulty.	Cycle interrupted	OFF
E92	Incongruency in the communication between the electronic board and the display board.	Electronic board not compatible with the display board (part nos. not correct for the affected model)	Cycle interrupted	OFF
E93	Error in the configuration of the appliance.	EEPROM configuration incorrect. Electronic board faulty.	Cycle interrupted with all LEDs flashing	OFF
E94	Error in the configuration of the drying cycle.	EEPROM configuration incorrect. Electronic board faulty.	Cycle interrupted.	OFF
E95	Communication error between microprocessor and EEPROM.	Electronic board faulty.	Cycle interrupted.	OFF
E97	Incongruency between selector and cycles	Configuration error	Cycle interrupted	OFF
EB1	Power frequency to appliance out of limits.	Problems with the power supply (incorrect/interference). Electronic board faulty.	Cycle interrupted. If a stable power supply is restored before the time-out has elapsed, the cycle resumes.	OFF
EB2	Power voltage too low.	Problems with the power supply (incorrect/interference). Electronic board faulty.	Cycle interrupted. If a stable power supply is restored before the time-out has elapsed, the cycle resumes.	OFF
EB3	Power voltage too low.	Problems with the power supply (incorrect/interference). Electronic board faulty.	Cycle interrupted. If a stable power supply is restored before the time-out has elapsed, the cycle resumes.	OFF

11 NO ACCESS TO DIAGNOSTICS PROGRAMME

11.1 No LEDs on the electronic board light

Power cable and connection OK?

- NO → Replace or repair the power cable and perform the diagnostics programme
- YES ↓

Does the suppressor (incorporated in the main terminal block) function correctly?

- NO → Replace the terminal block + suppressor and perform the diagnostics programme.
- YES ↓

Remove the connector from the main terminal block and connector J8 of the electronic board. Measure the continuity of the wiring across terminals **J8.1** and **L**. Is the circuit closed?

- NO → Replace or repair the wiring and perform the diagnostics programme.
- YES ↓

Measure the continuity of the wiring across terminals **J8.2** and **N**. Is the circuit closed?

- NO → Remove the connector from the heater unit and measure the closure of the thermostat. Is the circuit across terminals 3 - 5 of the heater unit closed?
  - NO → Identify the cause of the interruption in the operation of the fan causing the thermostat to intervene, and eliminate the cause. Replace the heater unit and perform the diagnostics cycle.
  - YES → Replace/repair the wiring and perform the diagnostics cycle.
- YES ↓

Does the programme selector function correctly mechanically?

- NO → Replace/repair the knob or spindle
- YES ↓

Replace the electronic board and perform the diagnostics cycle

11.2 Some of the LEDs on the electronic board light

Do the pushbuttons move freely and correctly action the various buttons?

- NO → Repair the mechanical problems (control panel, pushbuttons, supports, spindle)
- YES ↓

Replace the electronic board and perform the diagnostics cycle

It is not possible to access the diagnostics system if the electronic board has not been configured correctly: configuration errors (E93) are indicated by the flashing of all the LEDs.

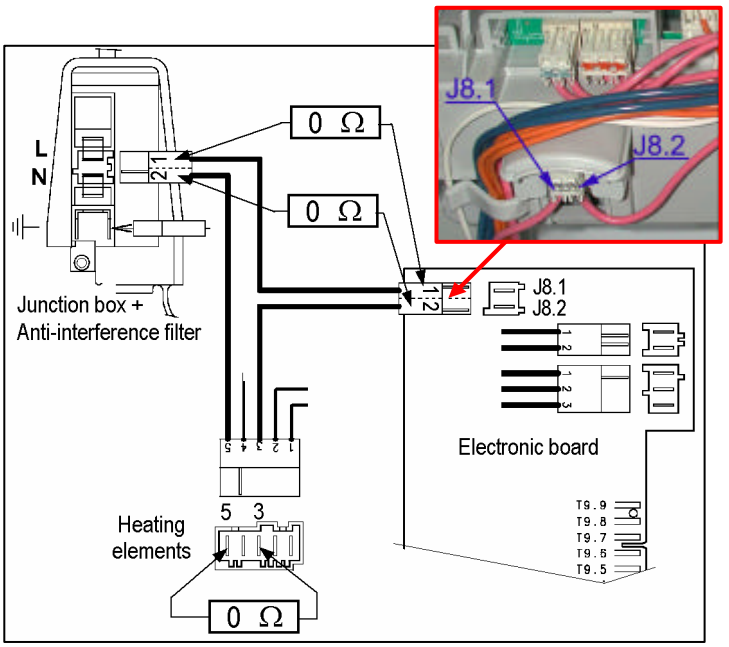

12 TABLES OF DRYING CYCLES

The tables contain a description of the main drying cycles of EDR1000new/EDR2000 electronic boards without any options selected.
In some cycles, the "degree of humidity" variable is indicated: this function is not featured on the EDR1000new board, and should not thus be taken into consideration

12.1 Key

- ⇨ **Phase**: indicates the various phases of the selected drying programme.
- ⇨ **Degree of humidity**: the final drying result that the user desires according to the programme selected.
- ⇨ **Maximum time**: maximum time for the current phase (" = seconds, ' = minutes).
- ⇨ **Temperature**: the temperature controlled by the NTC sensor.
- ⇨ **Motor movement**: motor rotation times during the entire cycle.
- ⇨ **Heating element**: indicates the time of operation of each branch of the heater (the first at 1400W, the second at 1000W/600W) during the cycle.
- ⇨ **Pump**: indicates the phases during which the canister fill pump is switched on.

Temperature:

During each cycle, the maximum temperature that can be reached inside the drum is indicated.
The electronic circuit controls the temperature via the NTC sensor and, when the maximum temperature for the cycle has been reached, switches off the heater unit. The cycle continues and, when the temperature falls by 4°, the heater unit is switched on again.

During the cooling phase, the temperature indicates the value below which the cycle will be terminated.

The values shown are measured inside the drum. The difference in temperature between the position of the sensor and the drum is 5°C.

Motor movement:

The "motor movement" column contains four fields, each of which specifies a time as represented in the diagram below:

- **"P1"** pause before direct rotation
- **"DIR"** direct rotation of the motor
- **"P2"** pause between direct rotation and reversal of motor
- **"INV"** reverse rotation of the motor

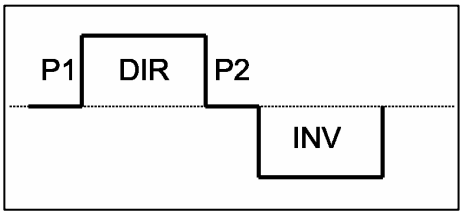

If "P2" and "INV" are not shown in the respective columns, this means that the motor rotates only in the direct direction with the respective pauses.
If "P1" and "DIR" are not shown in the respective columns, this means that the motor rotates only in the indirect direction with the respective pauses.

Heating elements

The "Heater unit" column consists of two sections: one refers to the more powerful element (1400W), the other to the less powerful element (1000/600W).
There are five columns for each heating element; these specify the relationship between the rotation of the motor and the actioning of the heater unit.
The first column ("Function") specifies the operation of the heating element in the following four situations:

- **SYNC ALL:** the heating element is powered during direct and reverse rotation of the motor, but not during the pauses.
- **SYNC DIR:** the heating element is powered only during direct rotation of the motor.
- **ALW ON:** the heating element is powered during the entire cycle, including pauses.
- **HEAT OFF**: the heating element is never powered.

The remaining four columns describe how the heater unit is powered with respect to the rotation of the motor.

As shown in the diagram below:

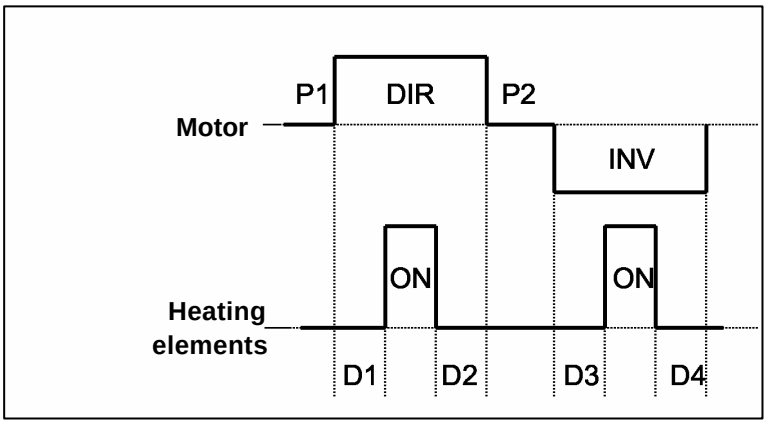

- **D1** is the delay time before the heater unit is switched on after commencement of direct motor rotation.
- **D2** is the interval between the moment at which the heater unit switches off and the moment at which the motor is paused before reversing the direction of rotation.
- **D3** is the delay time after which the heater unit switches on with respect to commencement of reverse rotation of the motor.
- **D4** is the interval between the moment at which the heater unit switches off and the moment at which the motor is paused before reversing the direction of rotation.

Example:

HEATING ELEMENT 1 (1400W)					HEATING ELEMENT 2 (1000-600W)				
Function	**D1**	**D2**	**D3**	**D4**	**Function**	**D1**	**D2**	**D3**	**D4**
SYNC ALL	+1”	-1”	+2”	+2”	SYNC DIR	+2”	+2”	-----	-----

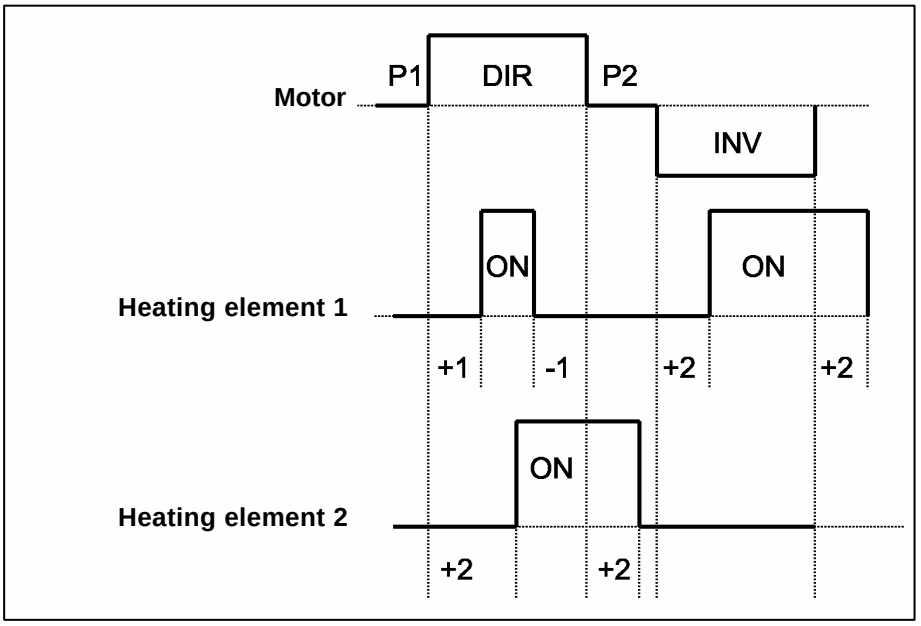

Pump

The last column refers to the pump (only for dryers with the canister in the **upper section**).

- **OFF** in this configuration, the pump is never activated.
- **Level** the pump is actioned only when the sump is filled with water and the float has actioned the microswitch. The duration of pump operation depends on the configuration of the appliance.
- **ON** in this configuration, the pump is always activated.

12.2 Cotton cycles
(No options selected)

Phase	Type of cycle	Degree of humidity	Maximum time	Temp: (°C)	Motor movements				HEATING ELEMENTS										Pump
									1400W					1000W/600W					
					P1	DIR	P2	INV	Function	D1	D2	D3	D4	Function	D1	D2	D3	D4	
Drying 1	EXTRA	CUPBOARD DRY	210'	85	2"	240"	2"	15"	SYNC DIR	+1"	-1"	---	---	SYNC DIR	+2"	-2"	---	---	Level
	EXTRA CUPBOARD DRY																		
	CUPBOARD DRY																		
	SLIGHTLY DAMP	IRON READY																	
	IRON READY	IRON READY																	
	MACHINE-IRON	MACHINE-IRON																	
Drying 2	EXTRA	---	15'	85	2"	240"	2"	15"	SYNC DIR	+1"	-1"	---	---	SYNC DIR	+30"	-30"	---	---	Level
	EXTRA UPBOARD DRY	---	5'																
	SLIGHTLY DAMP																		
	All other cycles	---	0'																
Drying 3	If selected humidity is "+"	---	3'	75	2"	240"	2"	15"	SYNC DIR	+1"	-1"	---	---	NO HEAT	---				Level
	If selected humidity is "++"		6'																
Cooling	If selected humidity is "-"	---	8'	40	2"	300"	2"	15"	NO HEAT	---				NO HEAT	---				OFF
	All other cycles		10'																
Pump	All cycles	---	10"	---	No movement				NO HEAT	---				NO HEAT	---				ON
Anti-crease	All cycles	---	30'	---	30"	5"	---	---	NO HEAT	---				NO HEAT	---				OFF
End of cycle	All cycles	---	---	---	No movement				NO HEAT	---				NO HEAT	---				---

12.3 EASY-IRON CYCLE
(No options selected)

Phase	Maximum time	Temp: (°C)	Motor movements				HEATING ELEMENTS										Pump
							1400W					1000W/600W					
			P1	DIR	P2	INV	Function	D1	D2	D3	D4	Function	D1	D2	D3	D4	
Drying 1	4'	55	2"	2500"	---	---	SYNC DIR	+1"	-1"	---	---	SYNC DIR	+2"	-2"	---	---	Level
Drying 2	2'	55	5"	90"	5"	10"	SYNC DIR	+1"	-1"	---	---	SYNC DIR	+2"	+2"	---	---	OFF
Drying 3	2'	50	5"	90"	5"	10"	SYNC DIR	+1"	-1"	---		NO HEAT	---				OFF
Cooling	10'	30	5"	90"	5"	10"	NO HEAT	---				NO HEAT	---				OFF
Pump	10"	---	No movement				NO HEAT	---				NO HEAT	---				ON
Anti-crease	30'	---	30"	5"	---	---	NO HEAT	---				NO HEAT	---				OFF
End of cycle	---	---	No movement				NO HEAT	---				NO HEAT	---				OFF

12.4 SYNTHETICS cycles
(No options selected)

Phase	Type of cycle	Degree of humidity	Maximum time	Temp: (°C)	Motor movements				Heating elements										Pump
									1400W					1000W/600W					
					P1	DIR	P2	INV	Function	D1	D2	D3	D4	Function	D1	D2	D3	D4	
Drying 1	EXTRA	CUPBOARD DRY	150'	69	2"	240"	2"	15"	SYNC DIR	+1"	-1"	---	---	SYNC DIR	+2"	-2"	---	---	Level
	CUPBOARD DRY																		
	IRON READY	IRON READY																	
Drying 2	EXTRA	---	10'	69	2"	240"	2"	15"	SYNC DIR	+1"	-1"	---	---	SYNC DIR	+2"	-2"	---	---	Level
	All other cycles		0'																
Drying 3	If selected humidity is "+"	---	3'	65	2"	240"	2"	15"	SYNC DIR	+1"	-1"	---	---	NO HEAT	---				Level
	If selected humidity is "++"		6'																
Cooling	If selected humidity is "-"	---	8'	40	2"	300"	2"	15"	NO HEAT	---				NO HEAT	---				OFF
	All other cycles		10'																
Pump	All cycles	---	10"	---	No movement				NO HEAT	---				NO HEAT	---				ON
Anti-crease	All cycles	---	30'	---	30"	5"	---	---	NO HEAT	---				NO HEAT	---				OFF
End of cycle	All cycles	---	---	---	No movement				NO HEAT	---				NO HEAT	---				---

12.5 DELICATES cycles
(No options selected)

Phase		Degree of humidity	Maximum time	Temp. (°C)	Motor movements				Heating elements										Pump
									1400W					1000W/600W					
					P1	DIR	P2	INV	Function	D1	D2	D3	D4	Function	D1	D2	D3	D4	
Drying 1		CUPBOARD	150'	50	6"	100"	6"	15"	SYNC DIR	+2"	-2"	---	---	NO HEAT	---				Level
Drying 2		---	10'	50	6"	100"	6"	15"	SYNC DIR	+2"	-2"	---	---	NO HEAT	---				Level
Drying 3	If selected humidity is "+"	---	2'	50	6"	100"	6"	15"	SYNC DIR	+2"	-2"	---	---	NO HEAT	---				Level
	If selected humidity is "++"		3'																
Cooling	If selected humidity is "-"	---	8'	28	6"	100"	6"	15"	NO HEAT	---				NO HEAT	---				OFF
	All other cycles		10'																
Pump		---	10"	---	No movement				NO HEAT	---				NO HEAT	---				ON
Anti-crease		---	50'	---	30"	5"	---	---	NO HEAT	---				NO HEAT	---				OFF
End of cycle		---	---	---	No movement				NO HEAT	---				NO HEAT	---				---

12.6 BABY cycle
(No options selected)

Phase		Degree of humidity	Maximum time	Temp. (°C)	Motor movements				Heating elements									Pump
									1400W					1000W/600W				
					P1	DIR	P2	INV	Function	D1	D2	D3	D4	Function	D1	D2	D3	D4	
Drying 1		CUPBOARD	150'	55	6"	90"	6"	8"	SYNC DIR	+2"	-2"	---	---	NO HEAT	---				Level
Drying 2	If selected humidity is "+"	---	1'	50	6"	90"	6"	8"	SYNC DIR	+2"	-2"	---	---	NO HEAT	---				Level
	If selected humidity is "++"		2'																
Cooling	If selected humidity is "-"	---	8'	28	6"	90"	6"	8"	NO HEAT	---				NO HEAT	---				OFF
	All other cycles		10'																
Pump		---	10"	---	No movement				NO HEAT	---				NO HEAT	---				ON
Anti-crease		---	30'	---	30"	5"	---	---	NO HEAT	---				NO HEAT	---				OFF
End of cycle		---	---	---	No movement				NO HEAT	---				NO HEAT	---				---

12.7 WOOL cycle
(No options selected)

Phase	Maximum time	Temp: (°C)	Motor movements				Heating elements									Pump
							1400W					1000W/600W				
			P1	DIR	P2	INV	Function	D1	D2	D3	D4	Function	D1	D2	D3	D4	
Drying 1	1'	---	5"	90"	5"	15"	NO HEAT	---				NO HEAT	---				OFF
Drying 2	4'	45	5"	90"	5"	15"	SYNC DIR	+1"	-1"	---	---	NO HEAT	---				OFF
Drying 3	1'	45	5"	90"	5"	15"	SYNC DIR	+1"	-1"	---	---	SYNC DIR	+2"	-2"	---	---	OFF
Cooling	8'	26	5"	90"	5"	15"	NO HEAT	---				NO HEAT	---				OFF
Pump	10"	---	No movement				NO HEAT	---				NO HEAT	---				ON
Anti-crease	30'	---	30"	5"	---	---	NO HEAT	---				NO HEAT	---				OFF
End of cycle	---	---	No movement				NO HEAT	---				NO HEAT	---				OFF

12.8 DRY-CLEANING cycle
(No options selected)

Phase	Maximum time	Temp: (°C)	Motor movements				Heating elements									Pump
							1400W					1000W/600W				
			P1	DIR	P2	INV	Function	D1	D2	D3	D4	Function	D1	D2	D3	D4	
Drying	24'	65	2"	300"	2"	14"	SYNC DIR	+2"	-2"	---	---	NO HEAT	---				Level
Cooling	10'	28	2"	300"	2"	14"	NO HEAT	---				NO HEAT	---				OFF
Pump	10"	---	No movement				NO HEAT	---				NO HEAT	---				ON
Anti-crease	30'	---	30"	5"	---	---	NO HEAT	---				NO HEAT	---				OFF
End of cycle	---	---	No movement				NO HEAT	---				NO HEAT	---				OFF

13 ACCESSIBILITY OF COMPONENTS

If an electric screwdriver is used, ensure that the screws are not tightened excessively!

13.1 Door

a. To remove the door, remove the screws which secure it to the hinge.

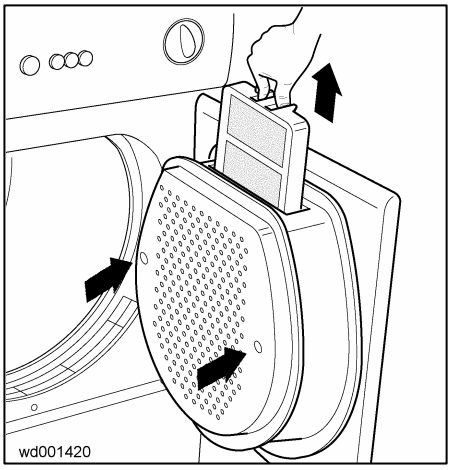

13.1.1 Fluff filter fitted inside door

a. Lift out and clean at the end of each cycle.

13.1.2 Fluff filter support

a. Remove the two screws which secure the fluff filter support to the inner door.

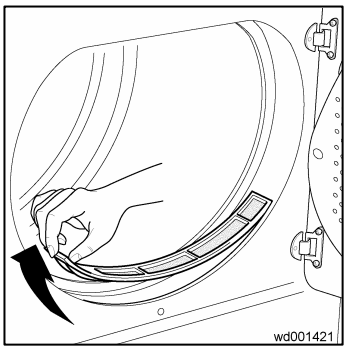

13.1.3 Lower fluff filter

a. E Remove by lifting from its seat.

13.1.4 Drum light (not all models)

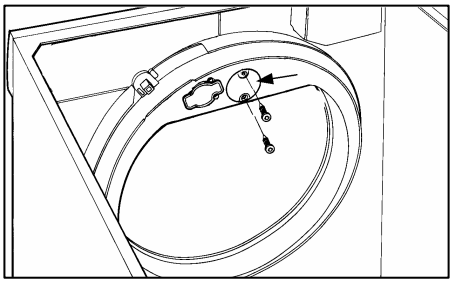

The bulb can be replaced from inside the drum as follows:

a. Remove the two screws which secure the bulb cover and remove the cover.
b. Unscrew the bulb from the bulb-holder.
c. *When replacing the cover, ensure that the sealing ring is correctly positioned in its seat.*

N.B. Use only bulbs supplied as original spare parts (the code is shown in the parts list for each model).

13.2 Work top

The following components can be accessed from the work top:

- **Control panel support**
- **Control panel**
- **Electronic control units**
- **Front brush**

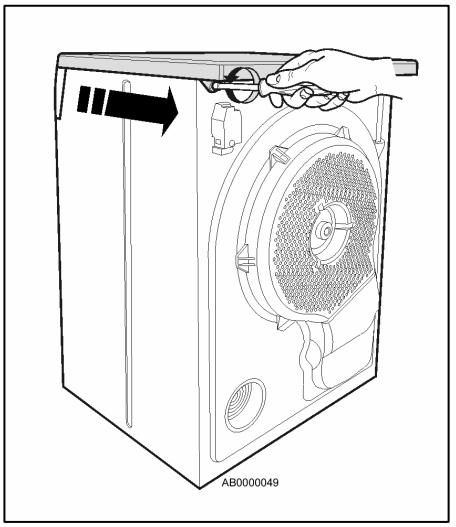

a. To remove the work top, first remove the screws which secure the top to the rear edge of the appliance.
b. Slide the top towards the rear.

13.2.1 Front brush of conductimetric sensor

a. Disconnect the connector.
b. Extract the brush from the seat in which it is fitted to the duct.

13.2.2 Control panel support assembly

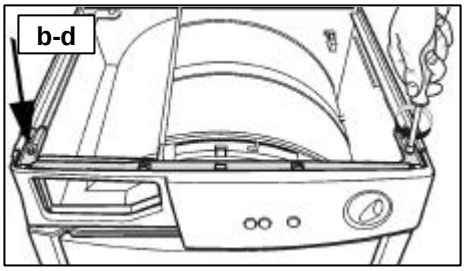

a. In models with the canister in the upper section: remove the canister and remove the screws which secure the control panel to the canister support.
b. Remove the screws which secure the control panel support to the cabinet.
c. Lift and tilt the control panel support assembly, and remove from the cabinet.

13.2.3 Control panel

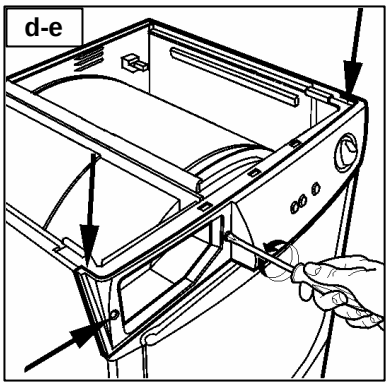

d. Remove the screws which secure the control panel support and the control panel to the cabinet.
e. Remove the canister (models with canister in upper section) and remove the screws which secure the control panel to the canister container.
f. (Open the door). Slightly raise the control panel support in order to release the control panel from the cabinet and rotate forwards.

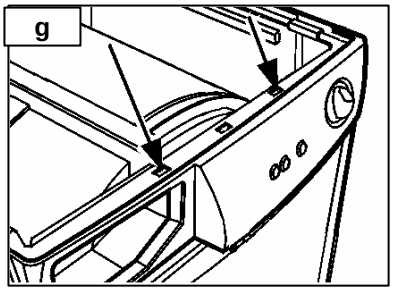

g. Detach the upper anchors and the central (internal) anchor which secure the control panel to the control panel support.
h. Release the lower central anchor which secures the control panel and remove the control panel.

N.B. When replacing, reposition the light diffusers on the control panel, slightly raise the canister support, and guide the pushbuttons carefully into the control panel.

13.2.4 Electronic board

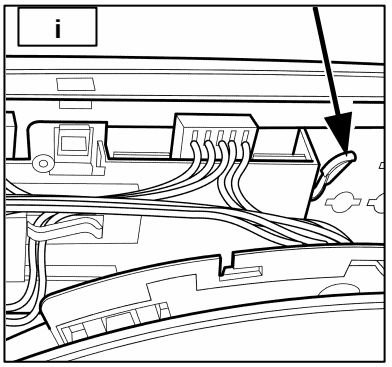

i. Press the anchor clip on the connector cover, lift and remove from the board casing.
j. Detach the wiring connectors from the electronic board.
k. Remove the control panel (see 13.2.3)
l. Remove the light diffuser for the LEDs (if featured) from the board casing.
m. Check that the selector is on "0" (OFF). Remove the spindle from the selector (including the knob rear section). *To facilitate removal, use pliers or lever off using a screwdriver.*
n. Remove the screws which secure the pushbutton support to the board and remove the support/pushbutton assembly.
o. Press the anchor tab.
p. Release the board assembly from the support by moving rightwards, and remove.

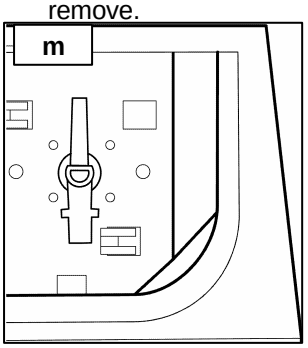

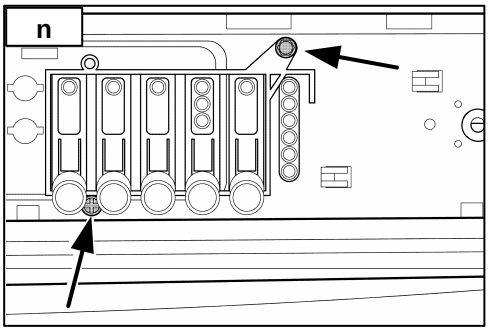

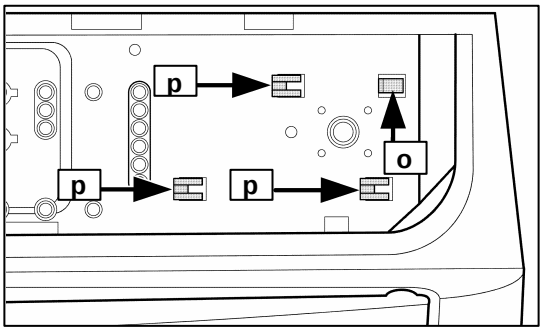

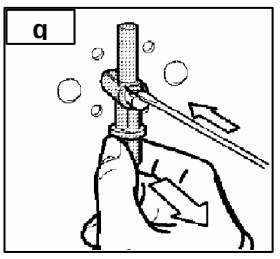

13.2.5 Programme selector rear section

q. Lift the anchor tab which secures the rear section and remove the rear section.

13.2.6 Pushbuttons

r. To remove the buttons from the support, widen the anchor tabs.

13.2.7 Canister container (models with canister in upper section)

a. Remove the screws which secure the canister container to the control panel and to the rear panel.
b. Detach all the anchor tabs which secure it to the control panel support.

13.3 Removal of the cover and rear panel gives access to:

13.3.1 Heater unit

a. Remove the screws (1) which secure the plastic rear panel cover (in the centre of the panel) and release the anchor tabs (2) from around the external perimeter.
b. Remove all the perimetral screws which secure the central cover to the rear panel.
c. Remove the side panel (viewing the appliance from the front).
d. Remove the screw which secures the side panel to the cross-member (after removing the canister).

When replacing the side panel, replace the screws in their original positions, otherwise the continuity of the earth circuit will be broken.

e. Remove the screws which secure the side panel to the rear panel, lift and remove.

The terminal block for the heater unit is located inside the microswitch support, and secured in position by an anchor tab.

f. Insert a screwdriver, release the anchor tab and remove the terminal block. Remove the wire ties that secure the wiring to the base and remove the wiring.
g. Remove the two screws which secure the heater unit to the rear panel. N.B. The right-hand screw of the heater unit also secures a deflector.

Before replacing the heater unit, be sure to re-position the wiring in its original position.

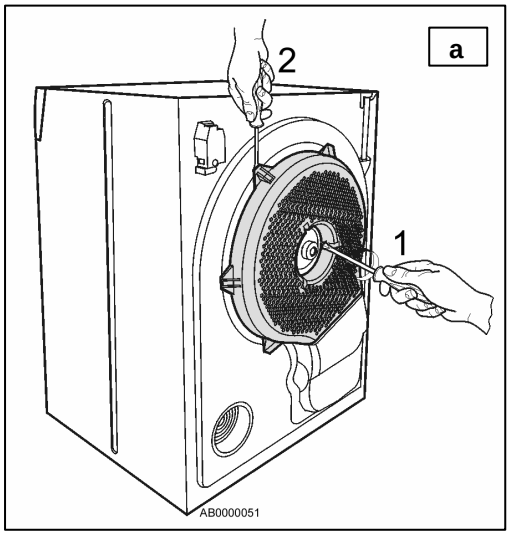

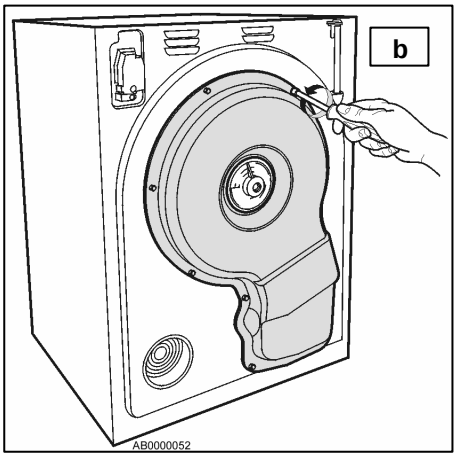

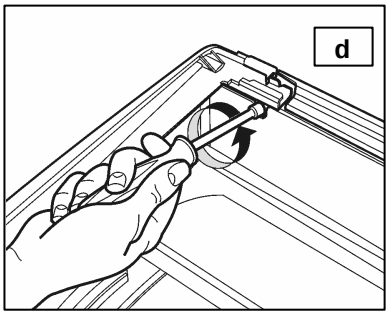

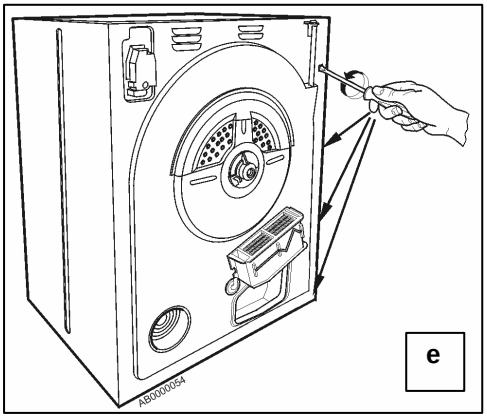

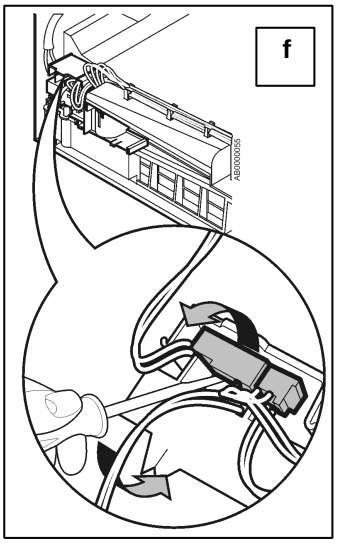

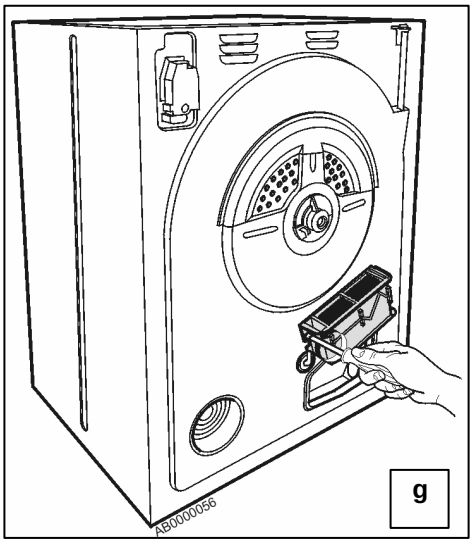

13.4 Removal of the left-hand side panel gives access to:

- **The floating microswitch**
- **The float**
- **The pump (models with canister in upper section)**
- **The door interlock**

a. Remove the work top.
b. Remove the screws which secure the side panel and remove the panel (see above).

In the rear section of the base, the sump contains the pump (models with canister in upper section), the floating microswitch and the float.

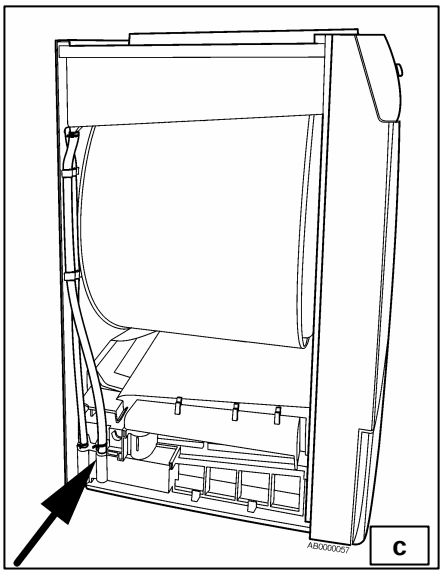

c. Remove the two tubes from their couplings (the red tube which fills the canister, and the transparent tube through which water overflow is ducted back to the sump when the canister is full).

d. Remove the screw (1) which secures the microswitch support and insert a screwdriver into the two anchor tabs which secure it to the sump.

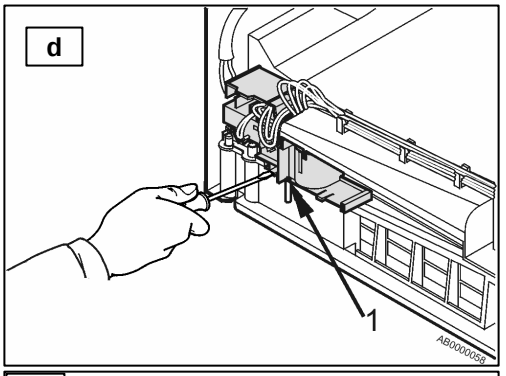

e. Lift both parts simultaneously and slide the microswitch support outwards.

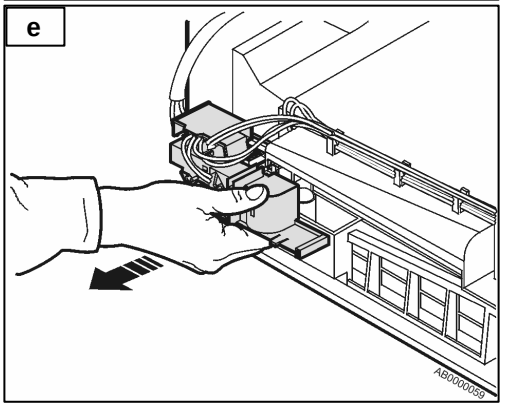

13.4.1 Floating microswitch

f. Turn the support upside-down to access the floating microswitch.

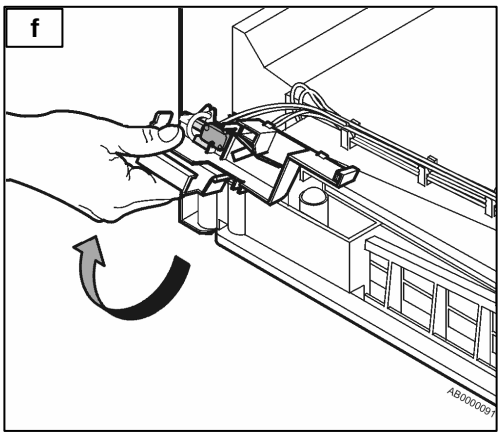

13.4.2 Float

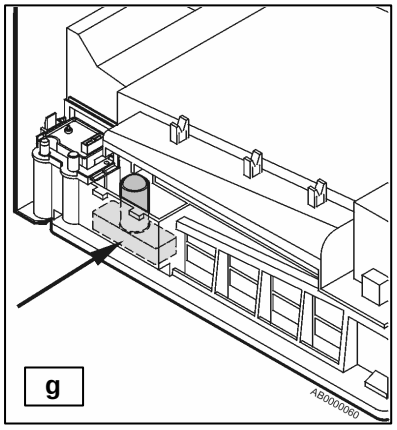

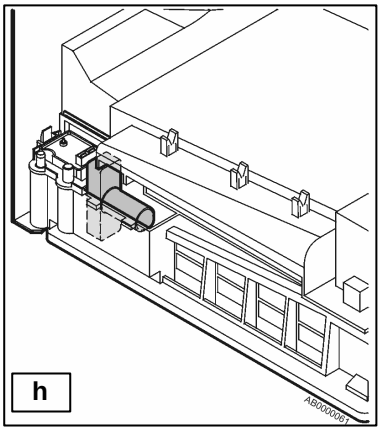

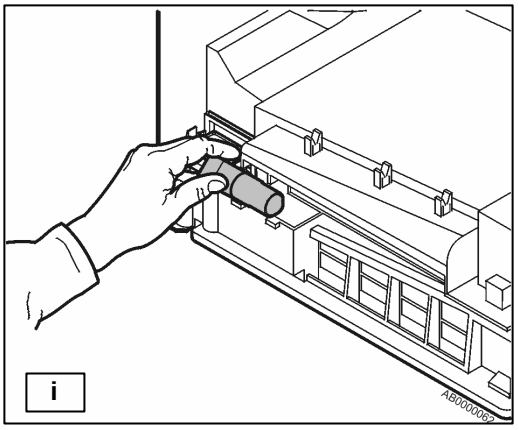

g. The float is located inside the sump.
h. To remove the float, turn it 90° clockwise as shown in the figure.
i. Lift the float and rotate outwards, and remove the float.

To replace the float, repeat this procedure in reverse sequence.

13.4.3 Pump (models with canister in upper section)

The pump, which ducts the water from the sump to the canister (in the upper section) is located next to the sump containing the float.

j. To remove the pump from its seat, it is necessary to disconnect the wiring connectors, remove the screw and release the anchor tab (shown by the arrow) which secures the pump to the sump. Remove the pump.

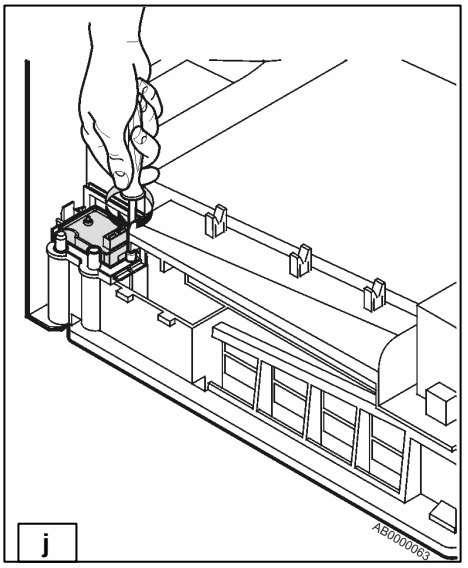

k. ***When re-assembling the pump, the float and the canister microswitch,*** *repeat the procedure described above in reverse sequence. When replacing the microswitch support, insert a screwdriver into the gap (shown by the arrow) in order to lift the microswitch lever and place it against the top of the float. If this procedure is not performed, the microswitch lever will remain alongside the float and become bent. In this case, the two components will not function correctly.*

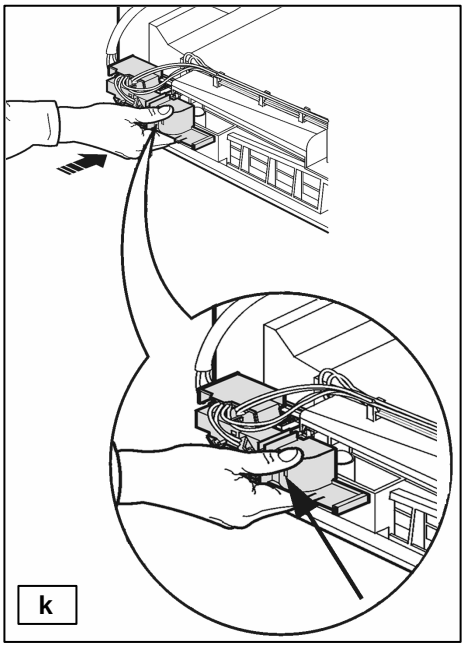

13.5 Door interlock

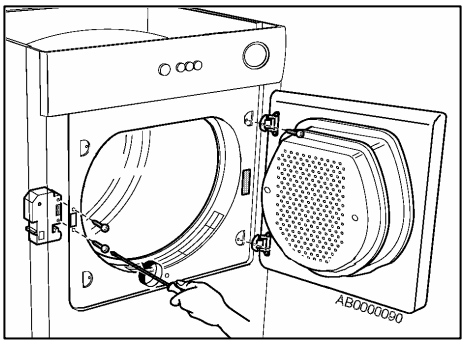

a. Remove the two screws which secure the interlock to the front panel and remove the interlock.

13.6 Removal of the right-hand side panel gives access to:

- **The motor capacitor**
- **The hot air circulation fan**
- **The cold air circulation fan**
- **The drum rotation motor**
- **The drive belt tensioner**
- **The belt tensioner spring**
- **The NTC sensor**

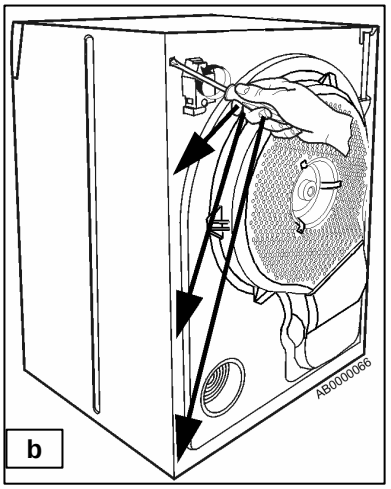

a. Remove the work top (see above).
b. Remove the screws which secure the right-hand side panel to the cross-member and remove the panel.
c. When replacing the side panel, replace the screws in their original position, otherwise the continuity of the earth circuit will be broken.
d. Remove the screws which secure the side panel to the rear panel.
e. Lift and remove the panel.

13.6.1 Motor capacitor

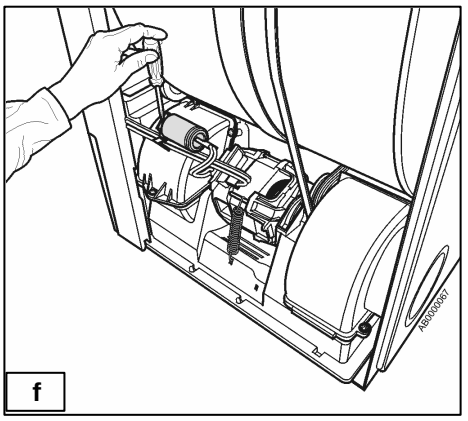

f. Detach the connectors, release the anchor tab and remove the capacitor.

13.6.2 NTC sensor

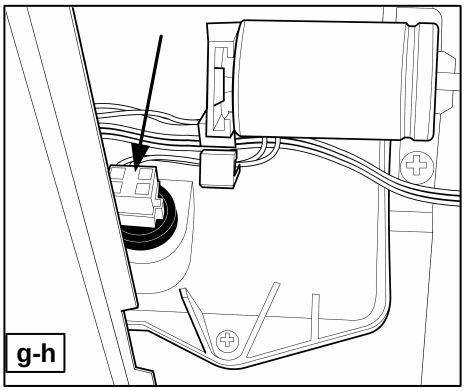

g. Remove the sensor from the seal.
h. Detach the connector.

13.6.3 Rear air duct cover (hot air circulation)

i. Remove the motor wiring from the anchor securing the wiring to the duct cover.
j. Remove the three screws which secure it to the base and remove.

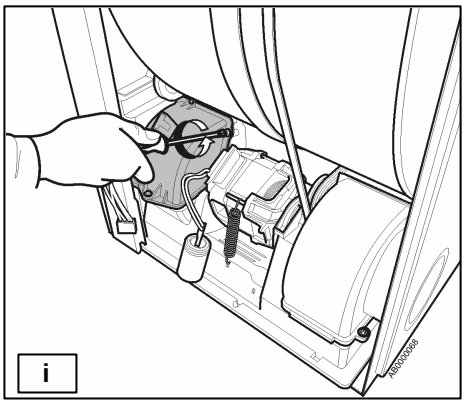

13.6.4 Rear air duct cover (cold air circulation)

k. Remove the screw and detach the duct cover from the three anchor tabs (two upper lateral tabs, one lower tab) which secure it to the base, and remove.

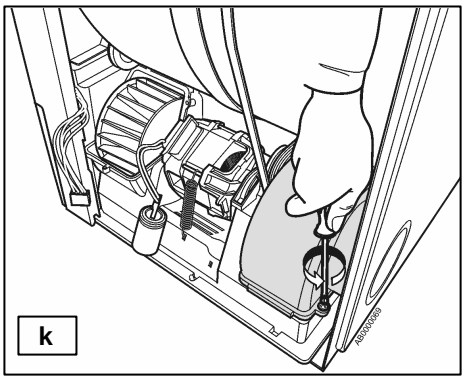

13.6.5 Drum rotation motor

l. After removing the covers from the two ducts, it is possible to access the drum rotation motor.
m. Remove the belt tensioner spring.
n. Remove the screws which secure the front and rear motor support brackets, rotate upwards and remove.
o. Rotate the entire motor block (motor + two fans) towards the interior of the dryer, lift and remove (after removing the drive belt from the fan).

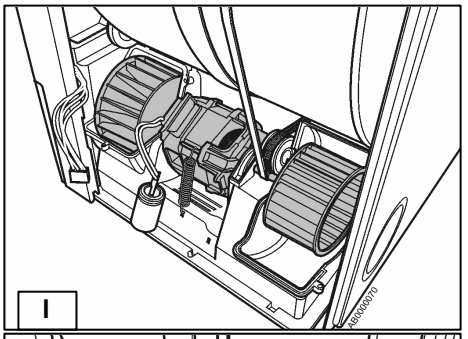

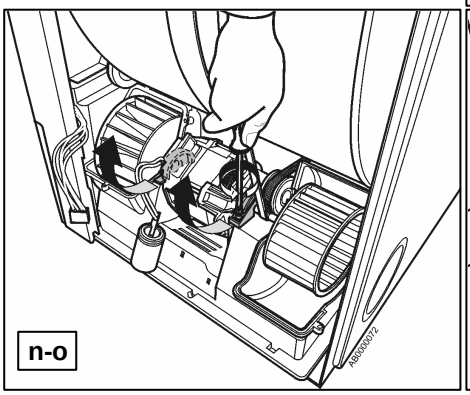

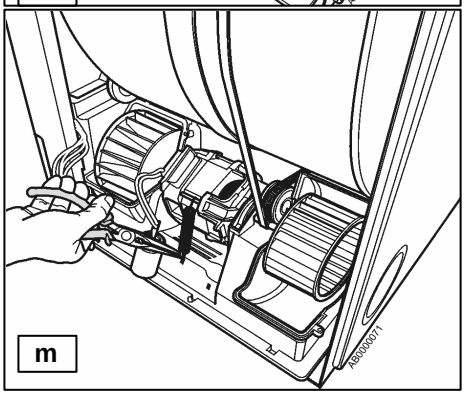

p. ***Replacing the belt tensioner roller / drive belt***

1. *Spacer*
2. *Belt-tensioner roller with incorporated spacer*
3. *Elastic ring*
4. *Belt in central position*
5. *Leave two grooves free on each side of the pulley.*

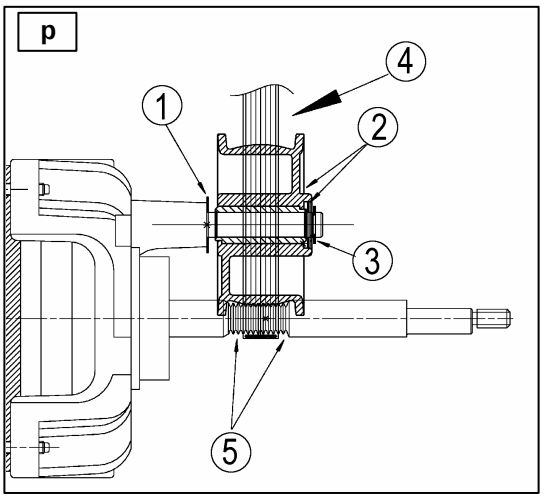

13.7 Removal of the front panel gives access to:

13.7.1 The front panel

a. Remove the screws which secure the panel to the front panel.
b. Pull the sealing ring from its seat.
c. To access the aperture button, remove the screws from inside the panel and release the three upper anchor tabs.

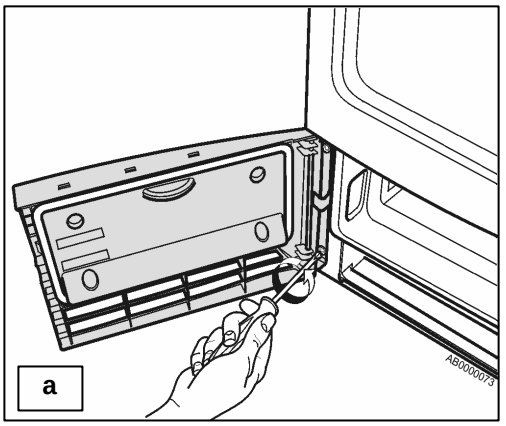

d. **When replacing the panel** in its housing, first ensure that the three anchor tabs are correctly positioned in their seats, and only then tighten the screws.
e. Check that the panel latch, when closed, actions the lever of the microbox, otherwise the dryer will not be powered.

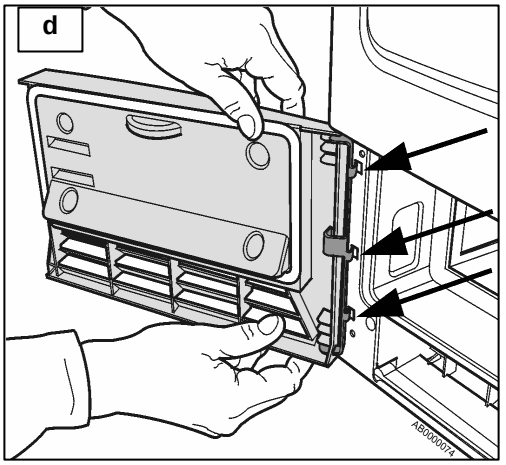

13.8 Removal of the plinth gives access to:

- **The plinth**
- **The microbox**

a. To remove the plinth: remove the screw which secures the plinth to the front panel, move it towards the interior of the appliance and remove.

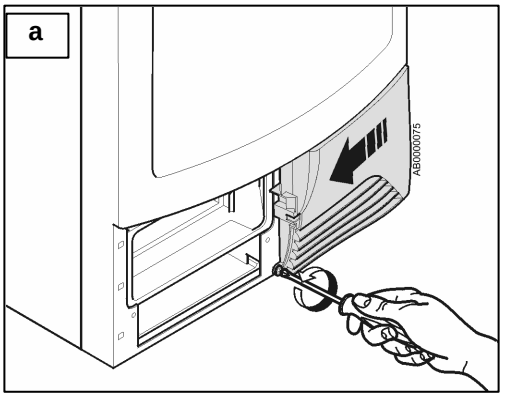

Access to the microbox is possible after removing the plinth

b. Remove the screw which secures the microbox support to the front panel; move it towards the centre of the dryer and remove.

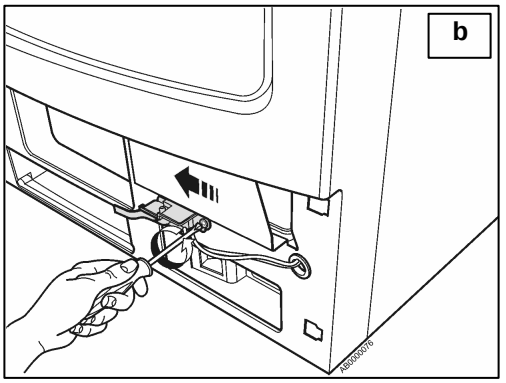

13.9 Removal of the rear panel gives access to:

- **The rear brush**
- **The drive belt**
- **The drum**
- **The air duct**
- **The idle pulley**
- **The front and rear seals**

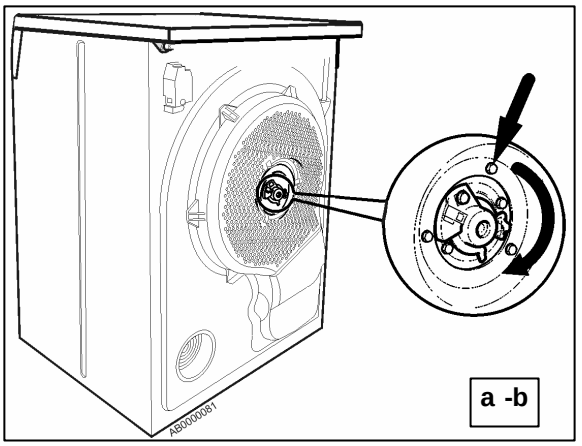

13.9.1 Rear brush (conductimetric sensor)

a. Remove the screw which secures the drum spindle cover.
b. Rotate the drum cover until it is released from the anchor in the lower section.
c. The brush is located inside the protective cover.

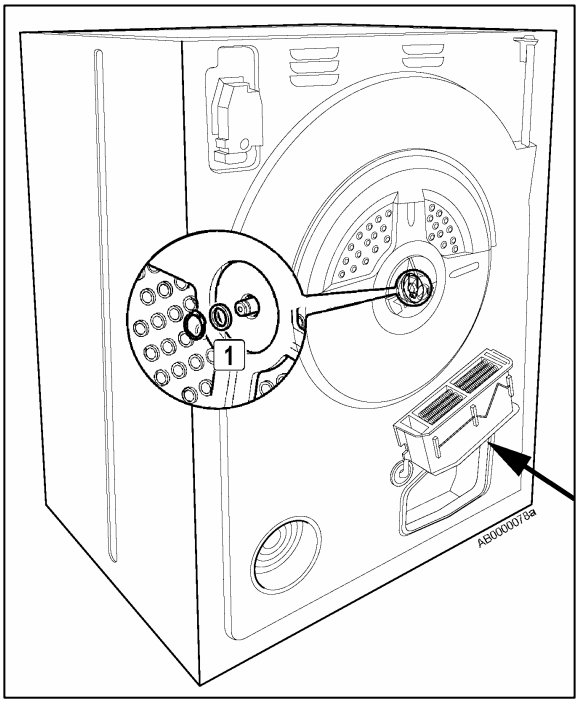

13.9.2 Rear panel

a. Remove the work top
b. Remove the left- and right-hand side panels.
c. Remove the plastic cover and the rear panel cover.
d. Remove the Benzing ring (1) and remove the spacing washer.
e. Disconnect the terminal block from the heater unit.
f. Remove all the screws which secure the rear panel to the base and to the cross-members (a screw beneath the heater unit secures the rear panel to the base).

13.9.3 Drive belt

a. Remove the work top
b. Remove the side panels.
c. Remove the rear panel cover.
d. Remove the rear panel.
e. Remove the motor group.

13.9.4 Drum

a. Remove the work top
b. Remove the side panels.
c. Remove the rear panel cover.
d. Remove the rear panel.
e. Remove the drum.

13.9.5 Duct

a. Remove the work top
b. Remove the rear panel.
c. Remove the rear panel cover.
d. Remove the drum
e. Remove the screws which secure the drum to the hinges and to the hinge hole masking plates.
f. Remove the duct.

From the duct, it is possible to access the lamp-holder and the relative wiring (models with drum light).

13.9.6 Duct rollers

a. Remove the work top
b. Remove the rear panel cover
c. Remove the rear panel
d. Remove the drum
e. Remove the screws which secure them to the duct (**2**)

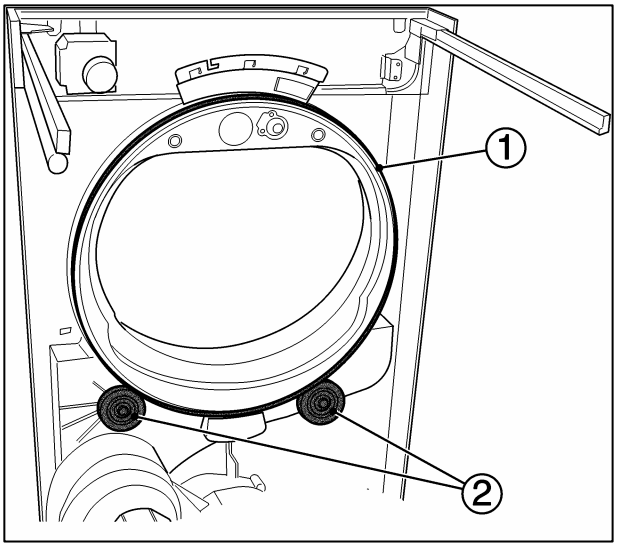

13.9.7 Front and rear seals

a. Remove the work top.
b. Remove the rear panel cover.
c. Remove the rear panel.
d. Remove the drum.
e. The rear seal can be simply pulled away from the ring fitted to the rear panel.
f. Slide the front seal (1) from its seat.

Notes for replacement of the rear drum seal

1. *Position of the join in the seal.*
2. *Position of the compensation hole*

3. *After replacing the rear drum seal, apply lubricant uniformly over the entire inner felt surface using 1 gr of silicone oil (part code 5023 72 70-00/9).*

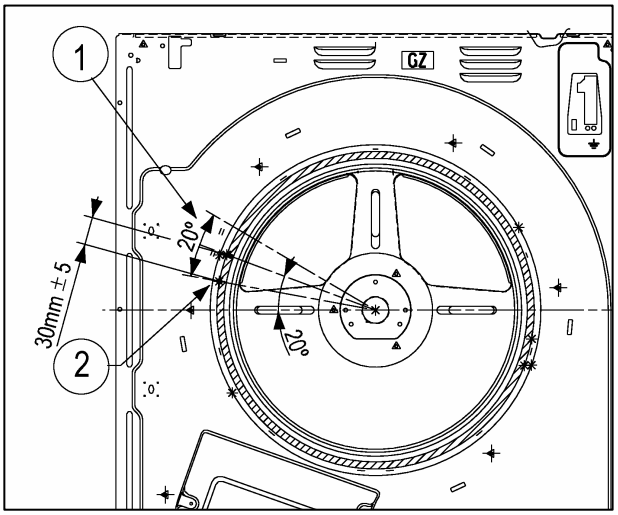

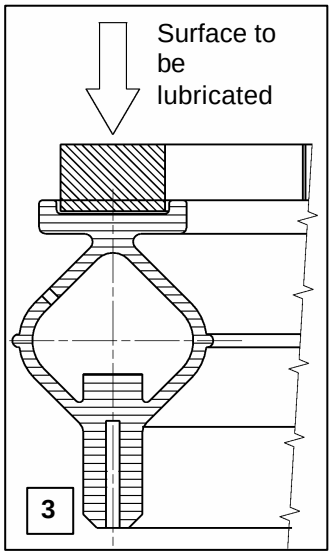

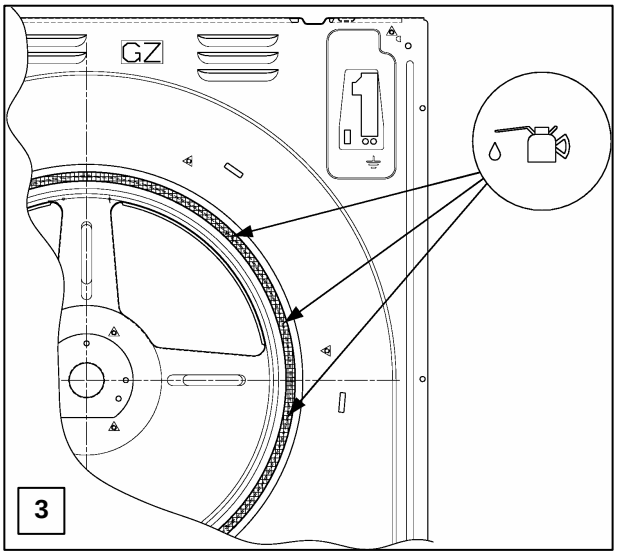

14 REVERSIBILITY OF THE DOOR

Proceed as follows:

1. Remove the screws which secure the hinges to the cabinet (fig.A.1). Remove the door.
2. Remove the screws which secure the hinge hole masking plates (fig.A-2) and fit the plates to the holes to which the hinges were previously fitted (fig.A-1).
3. Remove the canister.
4. Remove the work top.
5. Remove the left- and right-hand panels.
6. Remove the front panel hole cap (fig.A-4). To do so, squeeze together the anchor tabs which secure it to the cabinet.
7. Remove the screws which secure the door interlock (fig.A-3) to the cabinet and remove the lock.

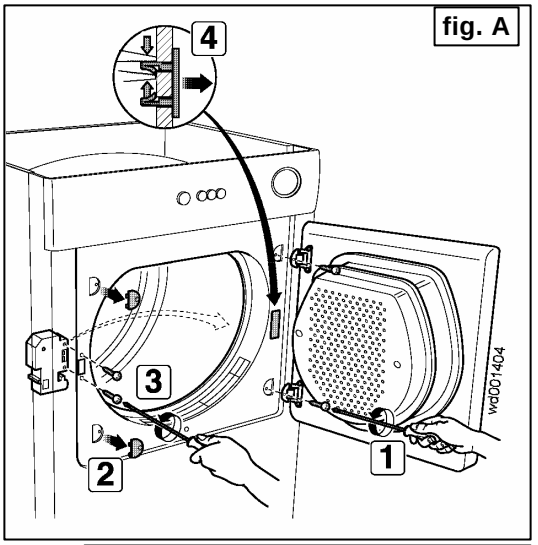

8. Detach the connector from the door lock.

9. Remove the tapes from the wiring (fig. B) and separate the wires for the door lock from the remaining wires.

10. Re-tape the remaining wiring.

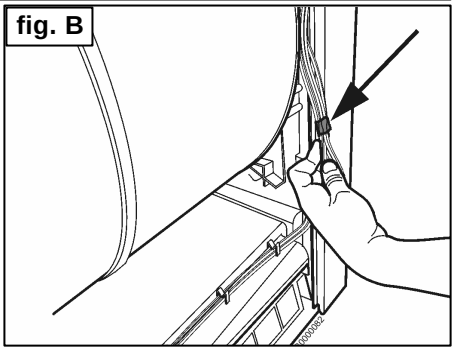

11. Insert the general wiring harness into the support(s) positioned on the duct (fig. C) and position them parallel to the front panel so that they cannot come into contact with the drum. Attach to the anchor using a wire tie.

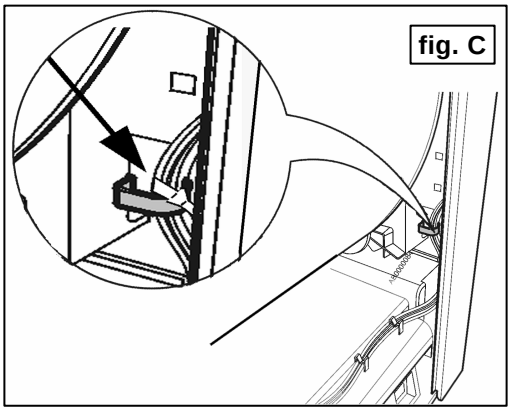

12. Insert the door lock connector between the drum and the canister container, then remove it from the position shown by the arrow (fig.D-1).
13. Insert it beneath the front brush cover (fig.D-2), secure to the anchors on the duct (fig.D-3), and remove the wiring from the other side of the cabinet.
14. Insert the door lock connector and secure with screws to the front panel (fig.E-5). Ensure that the wiring is not trapped between the door lock and the front panel.
15. Check that the wiring is routed through all the anchors released when removing the door lock wiring.
16. The excess section of the door lock wiring should be secured using a wire tie to the wiring cover (fig.D-6).

17. Fit the masking cap into the hole from which the door lock was removed (fig.E-4).

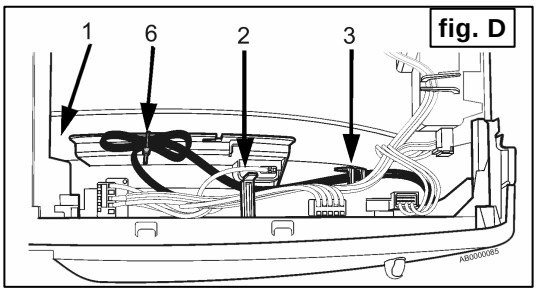

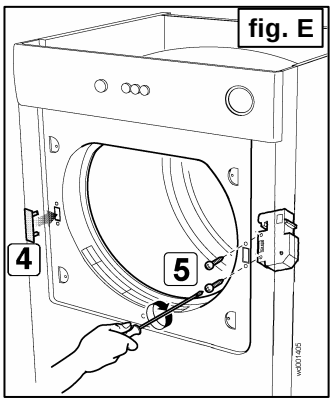

18. Remove the hinges by removing the hinge screws (fig.F-6).
19. Remove the hinge hole masking caps (fig.F-7).
20. Remove the masking cap from door latch hole (fig.F-8).
21. Remove the door latch (fig.F-9).

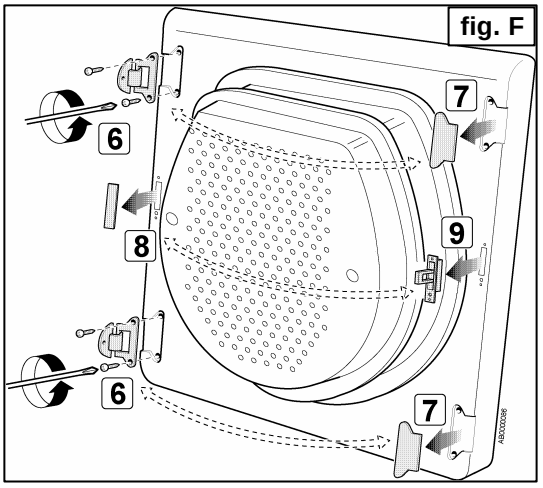

22. Press the hinge hole masking caps into position (fig.G-7).
23. Insert the latch hole masking cap (fig.G-8).
24. Fit the door latch (fig.G-9).
25. Screw the hinges into position (fig.G-6)

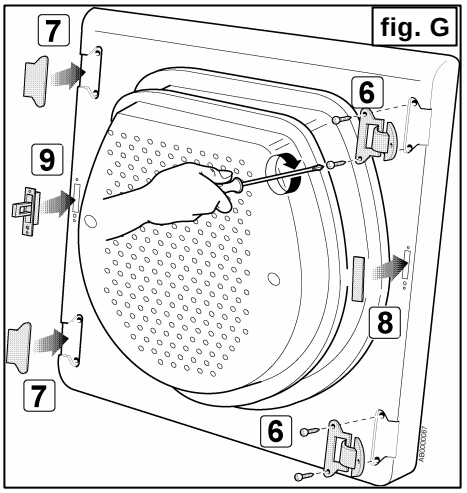

26. Position the door on the opposite side of the appliance and screw the hinges into position (fig.H-10).

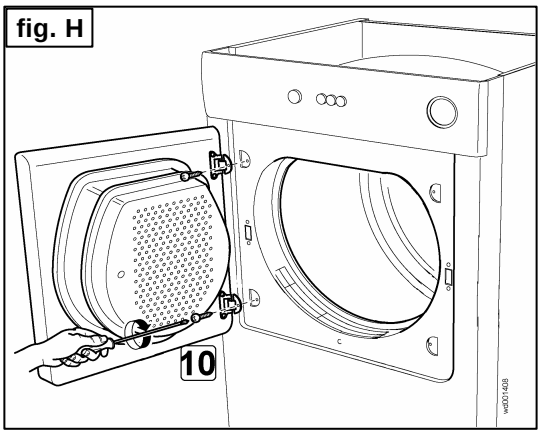

27. Replace the left- and right-hand side panels (replacing the screws in their original positions, otherwise the continuity of the earth circuit will be broken).

28. Replace the work top.

29. On completion of this procedure, the appliance will be as shown opposite (fig. I).

30. Re-position the “Push-Push” adhesive label.

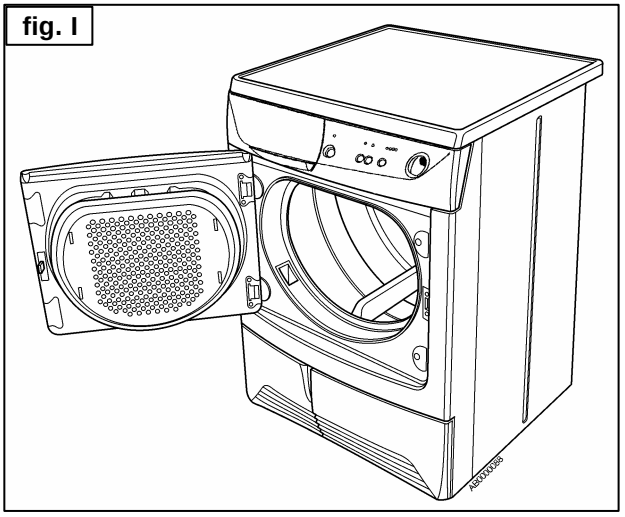

15 FINAL TESTING OF DOOR CLOSURE

In order to check that the door closes correctly (i.e. in compliance with safety standards) after reversing, proceed as follows:

a. Make a loop using string, wire etc. (1).
b. Loop the string around the door latch and close the door.

***Check the door aperture safety system as follows*:**

c. Connect the dynamometer (2) to the loop.
d. Pull the instrument in a direction perpendicular to the plane of the door. The dynamometer should indicate a value of between a maximum of 51 NEWTON (equivalent to 5.1 Kg) and a minimum of 38.2 NEWTON (equivalent to 3.8 Kg).

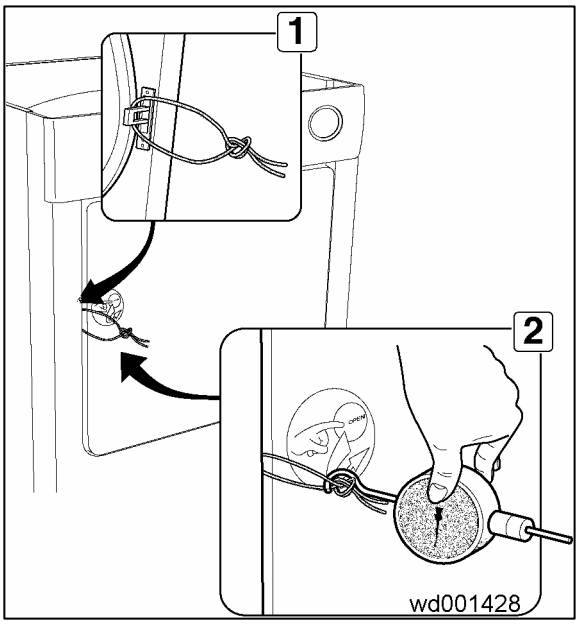

N.B. The door locking system is designed to ensure that, if a child should inadvertently remain inside the appliance, the door can be opened by simple pressure from the inside.
This appliance is in full compliance with current safety legislation.